ENVIRONMENTAL PERMIT PLANS
STATE PROJECT NO. 0135-0343
REPLACEMENT OF BRIDGE NO. 04069,
LAKESIDE DRIVE OVER NORTH STAMFORD RESERVOIR

CITY OF STAMFORD

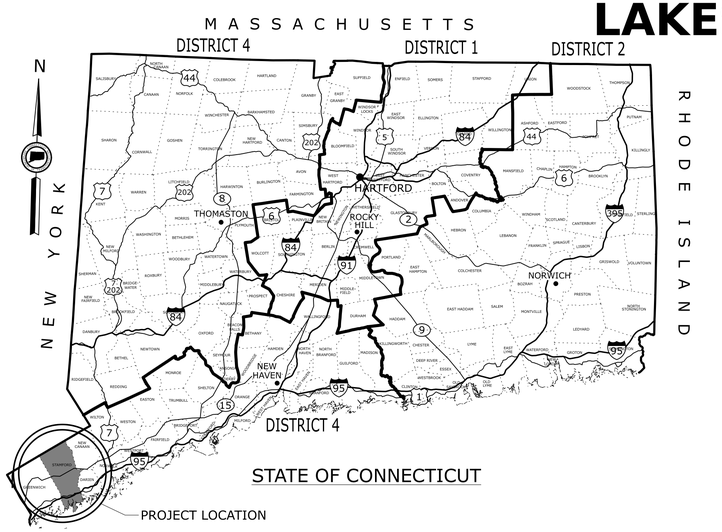

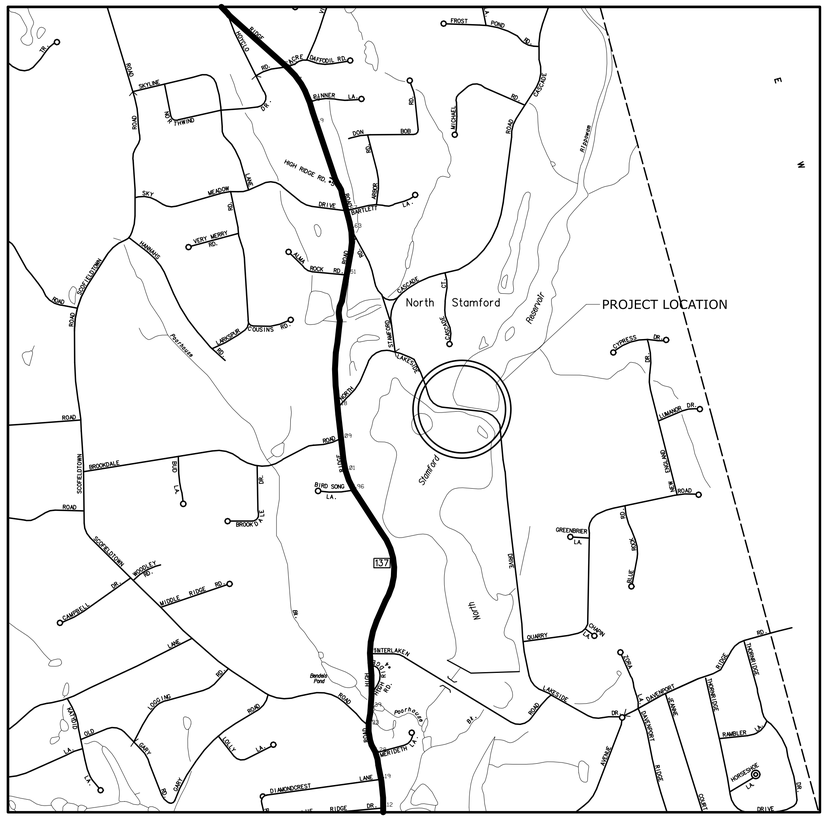

GENERAL NOTES:

1. THESE PLANS ARE NOT FOR CONSTRUCTION AND INTENDED ONLY FOR ENVIRONMENTAL PERMITTING PURPOSES. THESE PLANS HOLD AUTHORITY FOR ALL ACTIVITIES CONCERNING THE REGULATED AREA. FOR DETAILED PLANIMETRIC INFORMATION AND PAYMENT, REFER TO THE APPLICABLE CONTRACT DOCUMENTS.
2. THE DEPARTMENT OF TRANSPORTATION WILL ONLY SUBMIT REVISIONS TO CTDEEP AND USACE FOR CHANGES TO THE DESIGN THAT WILL AFFECT REGULATED AREAS.
3. FOR A DESCRIPTION OF THE WATERCOURSES, WETLANDS AND WETLAND SOILS, SEE RELEVANT SECTIONS OF THE PERMIT APPLICATION.
4. SURVEY BY CLOSE, JENSEN & MILLER P.C.
   400 FOOT GRID BASED ON CONNECTICUT COORDINATE SYSTEM N.A.D 1983
   VERTICAL DATUM BASED ON NAVD OF 1988. VERTICAL DATUM BASED ON N.A.V.D.1988
   OBTAINED FROM STATIC GPS OBSERVATIONS MADE ON APR. 13 2020
5. ALL CONSTRUCTION ACTIVITIES WILL BE CONDUCTED IN ACCORDANCE WITH THE DEPARTMENT'S STANDARD SPECIFICATIONS FOR ROADS, BRIDGES, AND INCIDENTAL CONSTRUCTION, FORM 818 SECTION 1.10 AND WILL ALSO FOLLOW REQUIRED BEST MANAGEMENT PRACTICES (BMPs) AND SEDIMENT AND EROSION CONTROL MEASURES IN ACCORDANCE WITH THE 2002 EROSION AND SEDIMENTATION CONTROL GUIDELINES AND THE 2004 STORMWATER QUALITY MANUAL.
6. WETLAND DELINEATION CONDUCTED FEBRUARY 2020 BY FHI STUDIO (FKA FITZGERALD & HALLIDAY, INC.)

LIST OF DRAWINGS

PMT-01 TITLE SHEET
PMT-02 GENERAL SITE PLAN
PMT-03 WETLAND/WATERCOURSE IMPACT PLAN
PMT-04 100YR FLOOD IMPACT PLAN
PMT-05 EROSION AND SEDIMENT CONTROL PLAN
PMT-06 GENERAL PLAN, ELEVATION & SECTION
PMT-07 STAGING PLAN

DESIGNED BY:
Stantec
STANTEC CONSULTING SERVICES INC.
55 CHURCH STREET SUITE 601
NEW HAVEN, CT 06510
Andrew Lessard
2023.05.17
13:24:39-04'00'

PLAN DATE: MAY 16, 2023

REV.	DATE	REVISION DESCRIPTION	SHEET NO.

THE INFORMATION INCLUDING ESTIMATED QUANTITIES OF WORK, SHOWN ON THESE SHEETS IS BASED ON LIMITED INVESTIGATIONS BY THE STATE AND IS IN NO WAY WARRANTED TO INDICATE THE CONDITIONS OF ACTUAL QUANTITIES OF WORK WHICH WILL BE REQUIRED.

Plotted Date: 05/16/2023

DESIGNER/DRAFTER: ASM

CHECKED BY: KG / JA

SCALE AS NOTED

STATE OF CONNECTICUT DEPARTMENT OF TRANSPORTATION

REPLACEMENT OF BRIDGE NO. 04069, LAKESIDE DRIVE OVER NORTH STAMFORD RESERVOIR

TOWN: STAMFORD

DRAWING TITLE: TITLE SHEET

PROJECT NO. 0135-0343

DRAWING NO. PMT-01

SHEET NO. 1

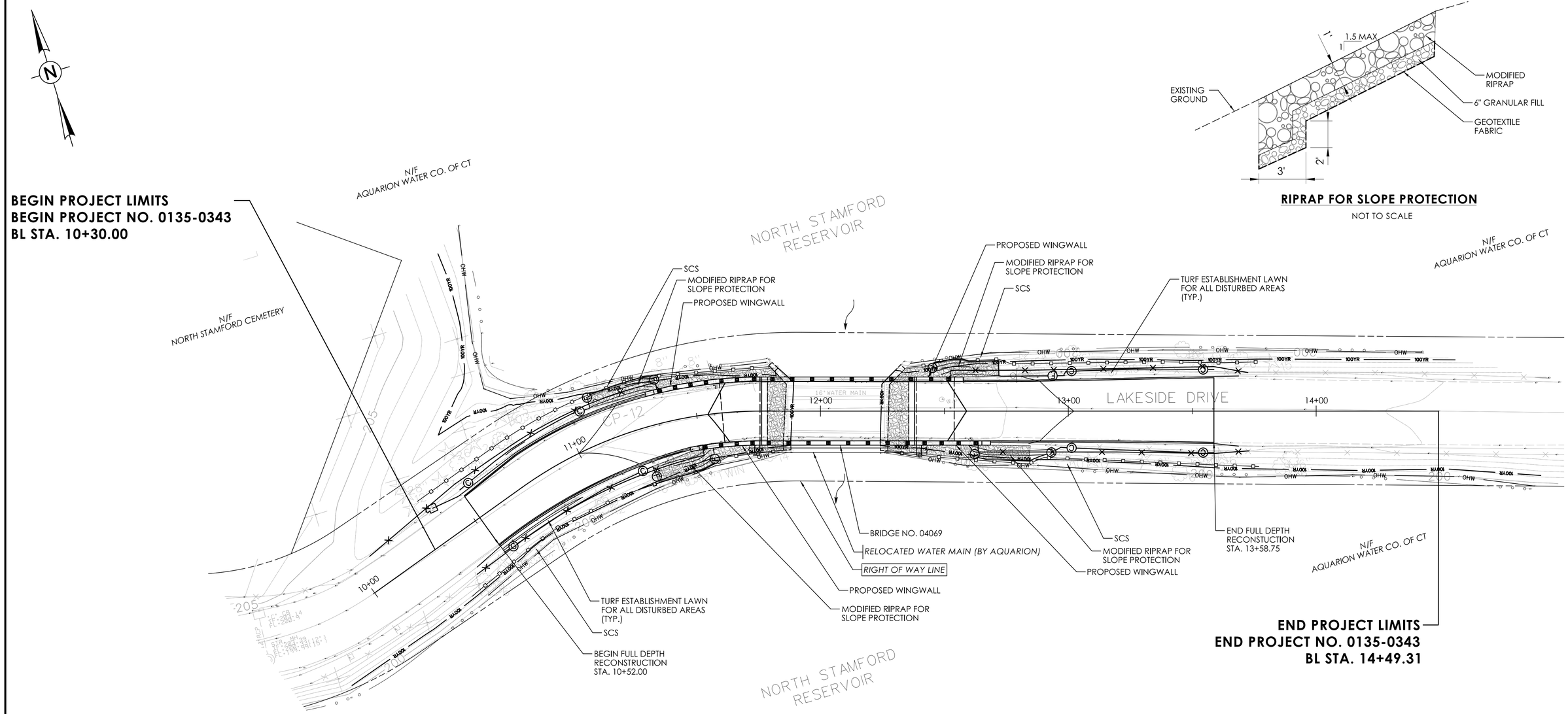

RIPRAP FOR SLOPE PROTECTION

NOT TO SCALE

SURVEY NOTES:

4. THE PROPERTY AND STREET LINES DEPICTED HAVE BEEN COMPILED FROM VARIOUS SOURCES AND ARE NOT TO BE CONSTRUED AS NECESSARILY BEING OBTAINED AS THE RESULT OF FIELD SURVEY NOR DO THEY REPRESENT A PROPERTY BOUNDARY OPINION.

LEGEND -

- OHW — ORDINARY HIGH WATER (OHW)
- SURVEYED EDGE OF WATER
- SED. CONTROL SYSTEM (SCS)
- 100YR — EX. 100-YEAR FLOOD (CALCULATED)

ENVIRONMENTAL PERMIT PLANS
PLAN DATE: MAY 16, 2023

REV.	DATE	REVISION DESCRIPTION

DESIGNER/DRAFTER: ASM CHECKED BY: KG

0 20' 40'
HORIZONTAL SCALE 1" = 20'

SIGNATURE/BLOCK:

Stantec Consulting Services Inc.
55 Church Street
Suite 601
New Haven, CT 06510

STATE OF CONNECTICUT
DEPARTMENT OF TRANSPORTATION

PROJECT NUMBER: 0135-0343
PROJECT DESCRIPTION: REPLACEMENT OF BRIDGE NO. 04069, LAKESIDE DRIVE OVER NORTH STAMFORD RESERVOIR
TOWN(S): STAMFORD
DRAWING TITLE: GENERAL SITE PLAN

DRAWING NO. PMT-02
SHEET NO. 2

LASTED SAVED BY: admane **FILE NAME:** U:\CT_Projects\0135-0343\Envir\Contract_Plans\PMT-02 GENERAL PLAN SHEET.dgn
PLOTTED DATE: 5/16/2023

TOWN REGULATED IMPACT AREA TABLE (SF [AC.])	
UPLAND REVIEW AREA IMPACTS	11,327 [0.26]

WETLAND IMPACT TABLE				
	WETLAND SITE NO.	WETLAND IMPACTS	WATERCOURSE IMPACTS	TOTAL
PERMANENT IMPACTS		00 S.F. (00 AC.)	00 S.F. (00 AC.)	00 S.F. (00 AC.)
TEMPORARY IMPACTS		00 S.F. (00 AC.)	00 S.F. (00 AC.)	00 S.F. (00 AC.)
TOTAL IMPACTS		00 S.F. (00 AC.)	00 S.F. (00 AC.)	00 S.F. (00 AC.)

NOTES:
1. NO WETLANDS ARE LOCATED WITHIN THE PROJECT AREA.
2. THERE ARE NO PERMENANT OR TEMPORARY IMPACTS ANTICIPATED.
3. CITY OF STAMFORD "UPLAND REVIEW AREA' IS MEASURED 100 FEET FROM THE OHW LINE OF THE NORTH STAMFORD RESERVOIR. THE ENTIRETY OF THIS PROJECT IS WHITHIN THE CITY OF STAMFORD REGULATED AREA.

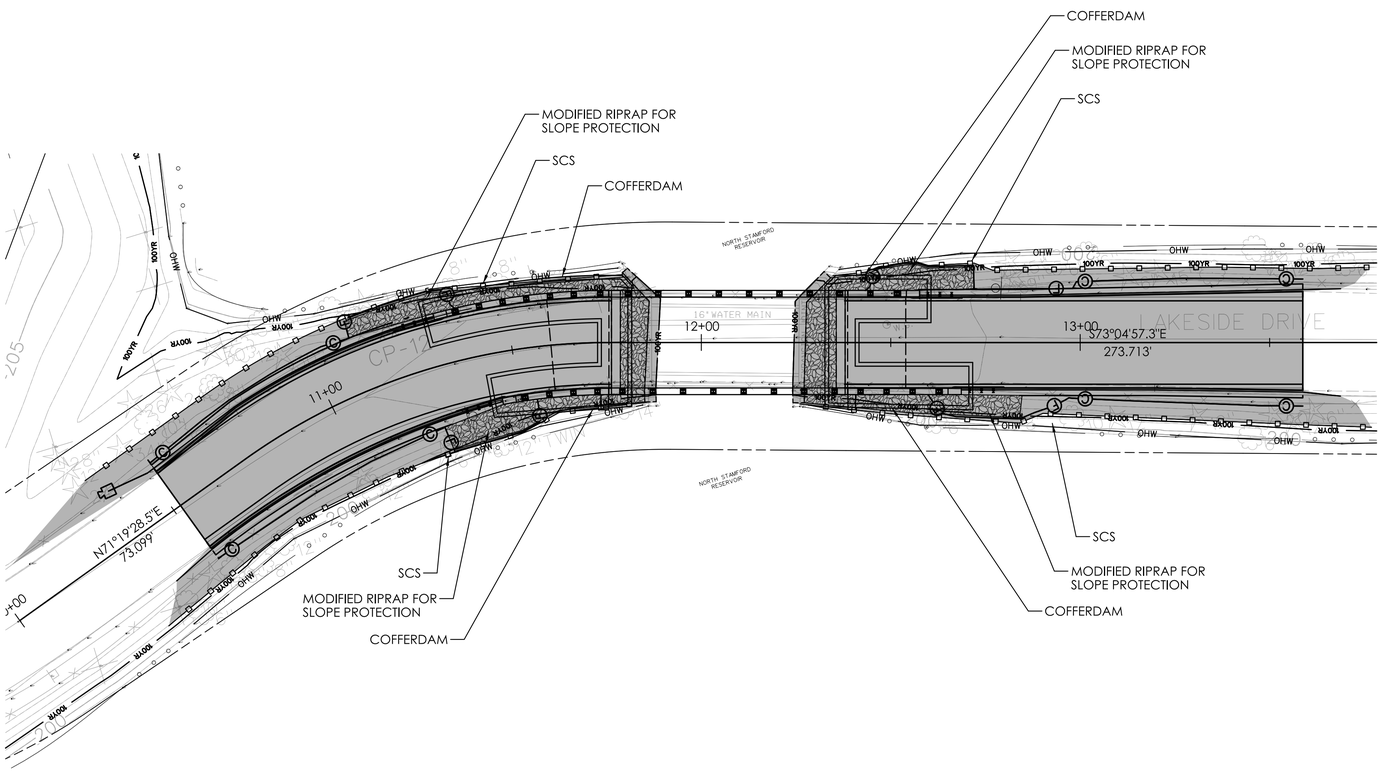

LEGEND -

THE DEPARTMENT OF TRANSPORTATION WILL ONLY SUBMIT REVISIONS TO THE DEEP FOR CHANGES TO THE DESIGN THAT WILL EFFECT THE NOTED REGULATED AREAS

- UPLAND REVIEW AREA
- OHW — ORDINARY HIGH WATER (OHW)
- SURVEYED EDGE OF WATER
- SED. CONTROL SYSTEM (SCS)
- 100YR — EX. 100-YEAR FLOOD (CALCULATED)

ENVIRONMENTAL PERMIT PLANS
PLAN DATE: MAY 16, 2023

REV.	DATE	REVISION DESCRIPTION

DESIGNER/DRAFTER: ASM CHECKED BY: KG

0 20' 40'
HORIZONTAL SCALE 1"=20'

SIGNATURE/ BLOCK:

Stantec Consulting Services Inc.
55 Church Street
Suite 601
New Haven, CT 06510

STATE OF CONNECTICUT
DEPARTMENT OF TRANSPORTATION

PROJECT NUMBER: 0135-0343
PROJECT DESCRIPTION: REPLACEMENT OF BRIDGE NO. 04069, LAKESIDE DRIVE OVER NORTH STAMFORD RESERVOIR
TOWN(S): STAMFORD
DRAWING TITLE: WETLAND / WATERCOURSE IMPACT PLAN

DRAWING NO. PMT-03
SHEET NO. 3

LASTED SAVED BY: admane **FILE NAME:** U:\CT_Projects\0135-0343\Envir\Contract_Plans\PMT-03 WETLAND - WATERCOURSE IMPACT PLAN - MUNICIPAL.dgn
PLOTTED DATE: 5/16/2023

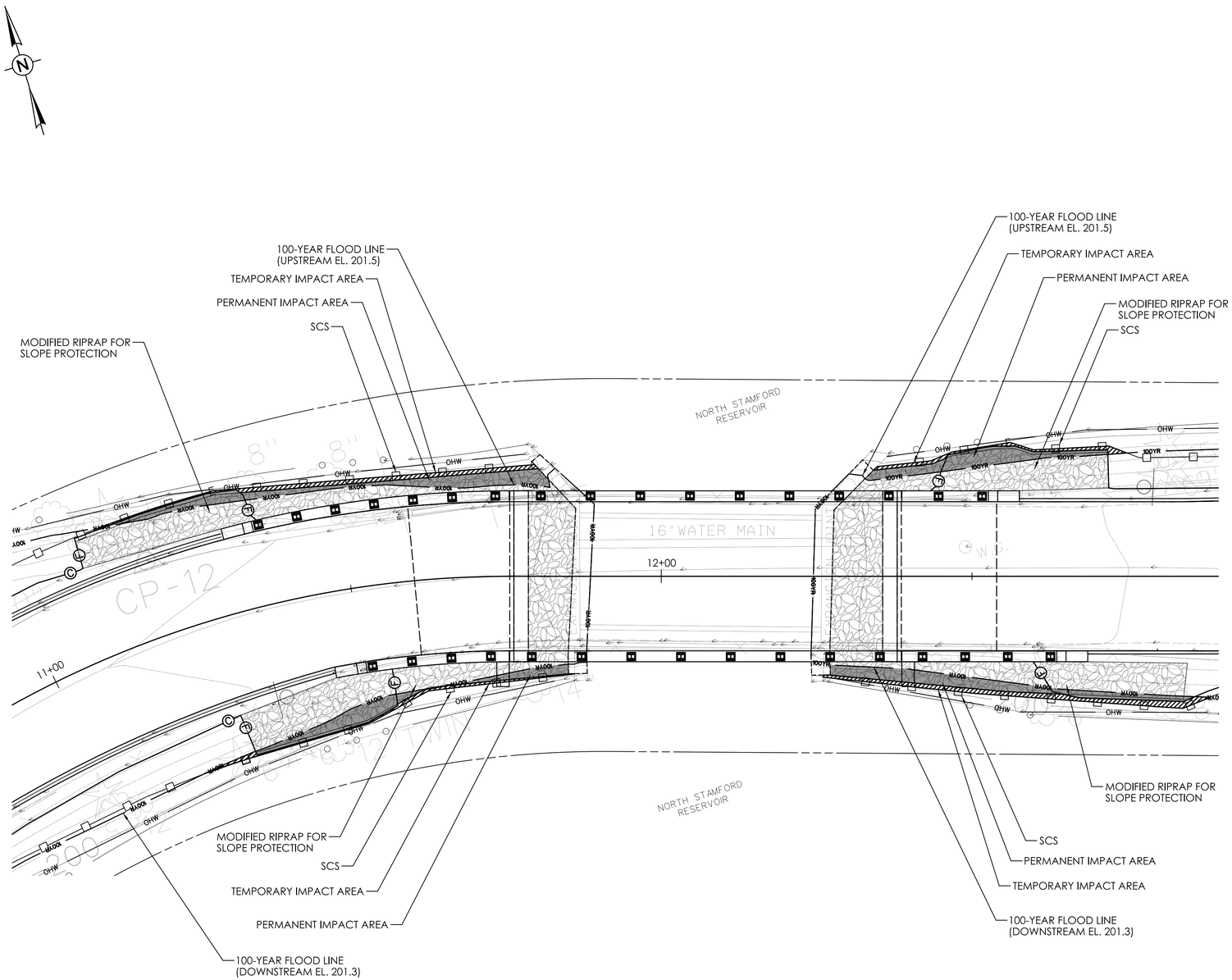

100-YR FLOODPLAIN IMPACTS CUT AND FILL VOLUME IMPACTS	
EXCAVATION IN FEMA FLOODPLAIN	FILL IN FEMA FLOODPLAIN
33.41 CY	11.07 CY

NOTES:
1) FILL / EXCAVATION IN FLOODPLAIN INVOLVES REMOVAL AND REPLACEMENT OF SUPERSTRUCTURE, ABUTMENTS, AND WINGWALLS.

LEGEND -

THE DEPARTMENT OF TRANSPORTATION WILL ONLY SUBMIT REVISIONS TO THE DEEP FOR CHANGES TO THE DESIGN THAT WILL EFFECT THE NOTED REGULATED AREAS

- TEMPORARY IMPACT AREA
- PERMANENT IMPACT AREA
- OHW — ORDINARY HIGH WATER (OHW)
- SURVEYED EDGE OF WATER
- SEDIMENT CONTROL SYSTEM (SCS)
- 100YR — EX. 100-YEAR FLOOD (CALCULATED)

ENVIRONMENTAL PERMIT PLANS
PLAN DATE: MAY 16, 2023

REV.	DATE	REVISION DESCRIPTION

DESIGNER/DRAFTER: ASM CHECKED BY: KG

0 10' 20'
HORIZONTAL SCALE 1"=10'

SIGNATURE/BLOCK:

Stantec Consulting Services Inc.
55 Church Street
Suite 601
New Haven, CT 06510

STATE OF CONNECTICUT
DEPARTMENT OF TRANSPORTATION

PROJECT NUMBER: 0135-0343
PROJECT DESCRIPTION: REPLACEMENT OF BRIDGE NO. 04069, LAKESIDE DRIVE OVER NORTH STAMFORD RESERVOIR
TOWN(S): STAMFORD
DRAWING TITLE: 100-YR FLOOD IMPACT PLAN

DRAWING NO. PMT-04
SHEET NO. 4

LASTED SAVED BY: admane **FILE NAME:** U:\CT_Projects\0135-0343\Envir\Contract_Plans\PMT-04 100-YR FLOOD IMPACT PLAN.dgn
PLOTTED DATE: 5/16/2023

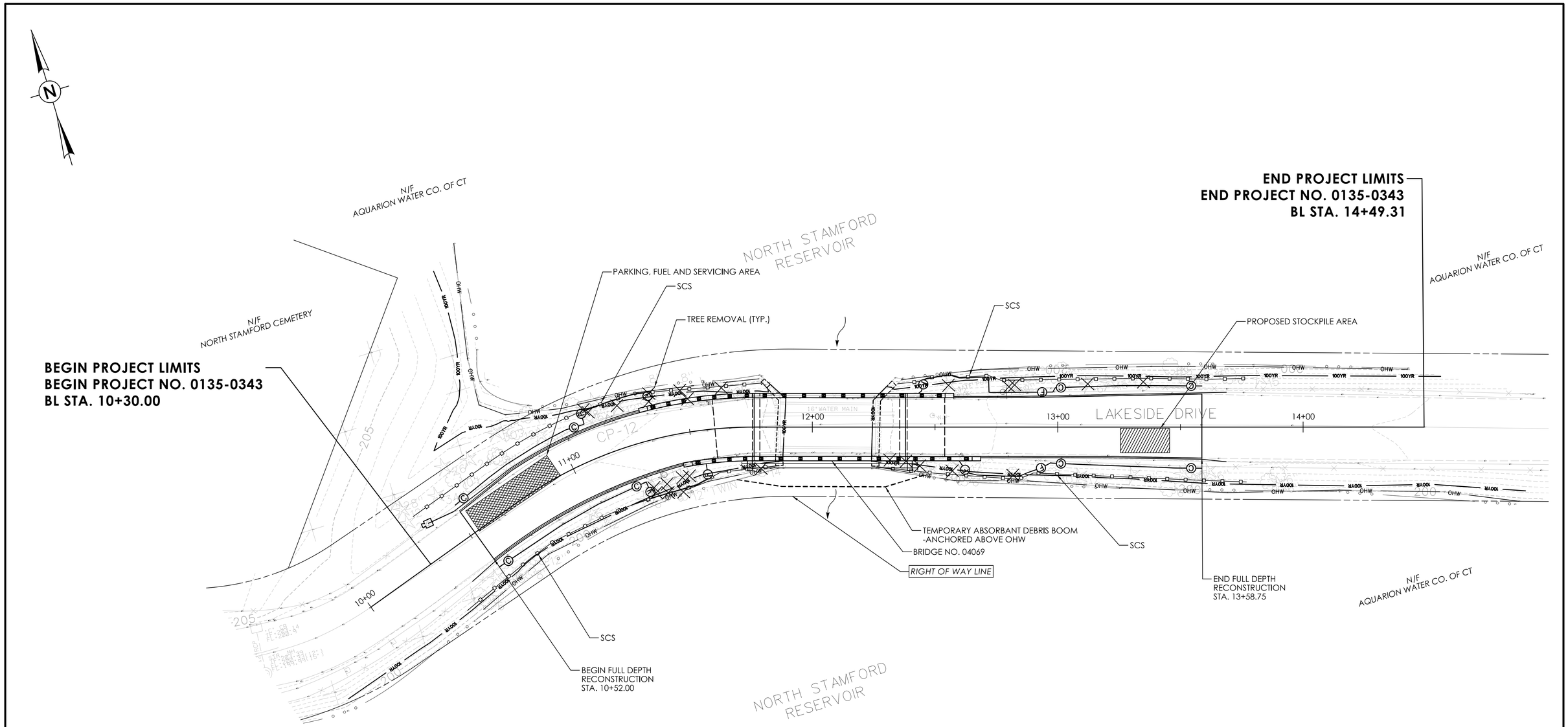

LEGEND

- ORDINARY HIGH WATER (OHW)
- SURVEYED EDGE OF WATER
- SED. CONTROL SYSTEM (SCS)
- EX. 100-YEAR FLOOD (CALCULATED)
- TREE REMOVAL
- STOCKPILE AREA
- PARKING, FUEL AND SERVICING AREA

SURVEY NOTES:

THE PROPERTY AND STREET LINES DEPICTED HAVE BEEN COMPILED FROM VARIOUS SOURCES AND ARE NOT TO BE CONSTRUED AS NECESSARILY BEING OBTAINED AS THE RESULT OF FIELD SURVEY NOR DO THEY REPRESENT A PROPERTY BOUNDARY OPINION.

NOTES:

TREES NOT CALLED OUT FOR REMOVAL SHALL REMAIN AND BE PROTECTED UNLESS OTHERWISE NOTED BY THE ENGINEER.

ENVIRONMENTAL PERMIT PLANS
PLAN DATE: MAY 16, 2023

REV.	DATE	REVISION DESCRIPTION

DESIGNER/DRAFTER: ASM CHECKED BY: KG

0 20' 40'
HORIZONTAL SCALE
1" = 20'

SIGNATURE/ BLOCK:

Stantec Consulting Services Inc.
55 Church Street
Suite 601
New Haven, CT 06510

STATE OF CONNECTICUT
DEPARTMENT OF TRANSPORTATION

PROJECT NUMBER: 0135-0343
PROJECT DESCRIPTION: REPLACEMENT OF BRIDGE NO. 04069, LAKESIDE DRIVE OVER NORTH STAMFORD RESERVOIR
TOWN(S): STAMFORD
DRAWING TITLE: EROSION AND SEDIMENT CONTROL PLAN

DRAWING NO. PMT-05
SHEET NO. 5

LASTED SAVED BY: admane FILE NAME: U:\CT_Projects\0135-0343\Envir\Contract_Plans\PMT-05 ERROSION AND SEDIMENT CONTROL PLAN_MUNICIPAL.dgn
PLOTTED DATE: 5/16/2023

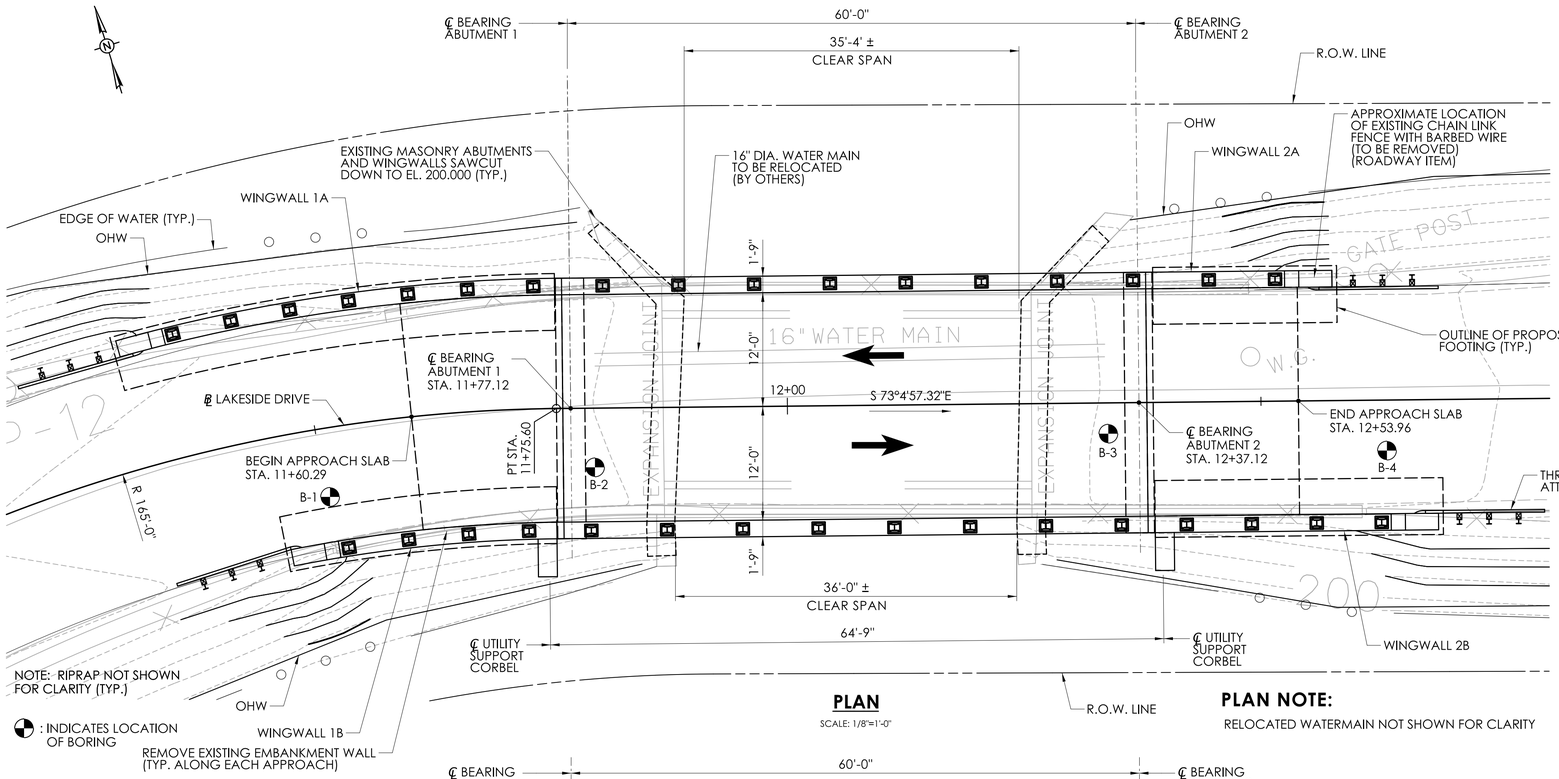

PLAN

SCALE: 1/8"=1'-0"

PLAN NOTE:

RELOCATED WATERMAIN NOT SHOWN FOR CLARITY

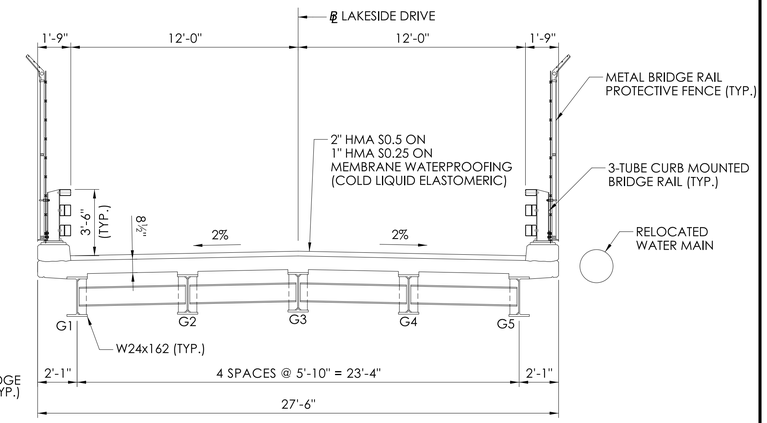

PROPOSED SECTION

SCALE: 1/4"=1'-0"

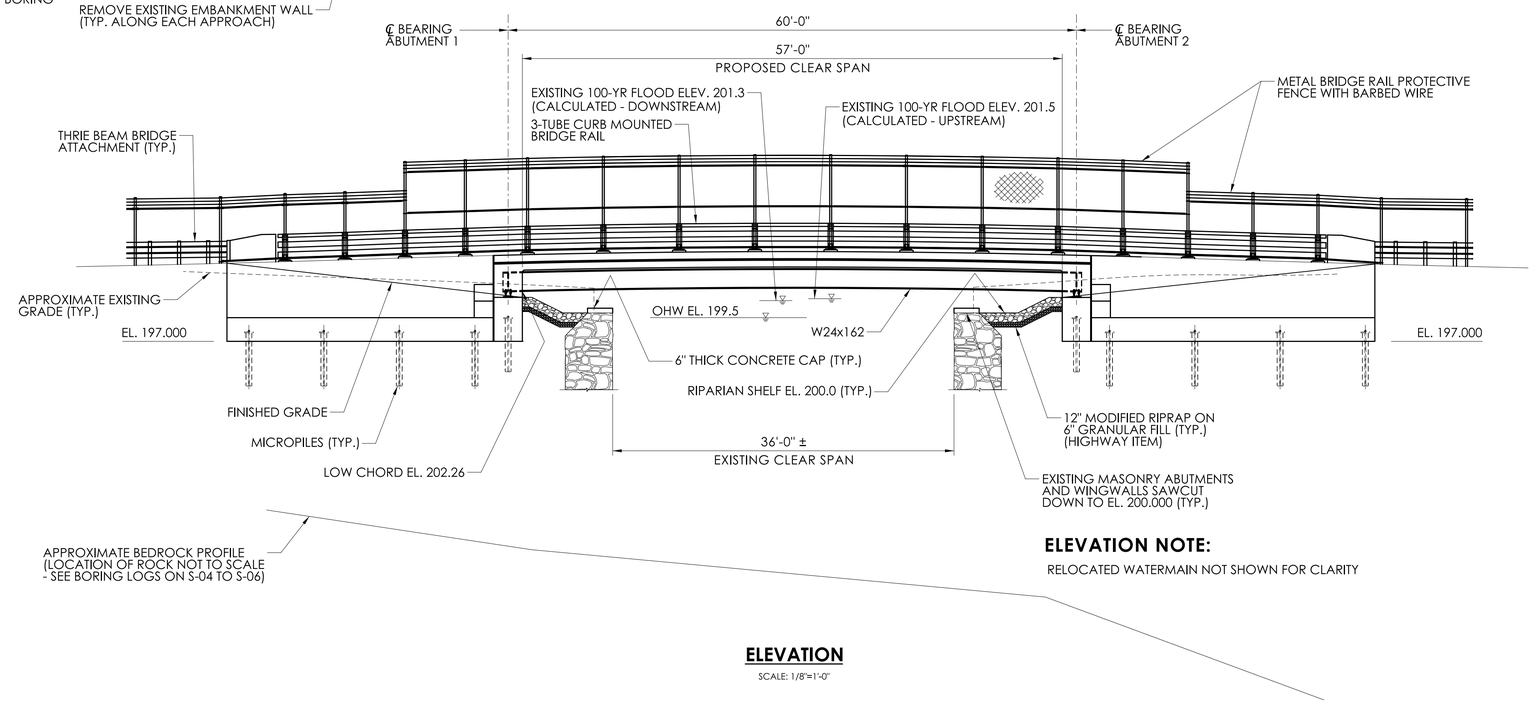

ELEVATION NOTE:

RELOCATED WATERMAIN NOT SHOWN FOR CLARITY

ELEVATION

SCALE: 1/8"=1'-0"

OPENESS RATIO (OR):

OR = OPEN AREA / STRUCTURE LENGTH

OR = 948 S.F. / 27.5 FT = 34.5 FT

34.5 FT > 0.82 FT (RECOMMENDED MINIMUM)

BANK FULL WIDTH (BFW):

BFW = 36 FT

1.2 X BFW = 43.2 FT

43.2 FT < 57 FT, PROPOSED SPAN

HYDRAULIC DATA TABLE		
DRAINAGE AREA	21.5 SQ. MILES	
DESIGN FREQUENCY	100-YR	
DESIGN DISCHARGE	3690-CFS	
AVERAGE DAILY FLOW ELEVATION	198.8 FT (ESTIMATED)	
UPSTREAM DESIGN WATER SURFACE ELEVATION	201.5 FT	
DOWNSTREAM DESIGN WATER SURFACE ELEVATION	201.3 FT	
MAXIMUM SCOUR ELEVATION	NO ESTIMATED SCOUR	
FREQUENCY	200-YR	
DISCHARGE	4295-CFS	
WORST CASE SCOUR SUB-STRUCTURE UNIT	NA	
AVERAGE DAILY FLOW	38 CFS	EL 198.8 FT
AVERAGE SPRING FLOW	73-CFS	198.9FT

ENVIRONMENTAL PERMIT PLANS
PLAN DATE MAY 16, 2023

REV.	DATE	REVISION DESCRIPTION

DESIGNER/DRAFTER: JRA CHECKED BY: AML

SIGNATURE/ BLOCK:

Stantec Consulting Services Inc.
55 Church Street
Suite 601
New Haven, CT 06510

CITY OF STAMFORD CONNECTICUT

PROJECT NUMBER: 0135-0343
PROJECT DESCRIPTION: REPLACEMENT OF BRIDGE NO. 04069, LAKESIDE DRIVE OVER NORTH STAMFORD RESERVOIR
TOWN(S): STAMFORD
DRAWING TITLE: GENERAL PLAN, ELEVATION & SECTION

DRAWING NO. PMT-06
SHEET NO. 6

LAST SAVED BY: jabate **FILE NAME:** U:\CT_Projects\0135-0343\Envir\Contract_Plans\PMT-06 GENERAL PLAN, ELEVATION & SECTION_MUNICIPAL.dgn
PLOTTED DATE: 5/17/2023

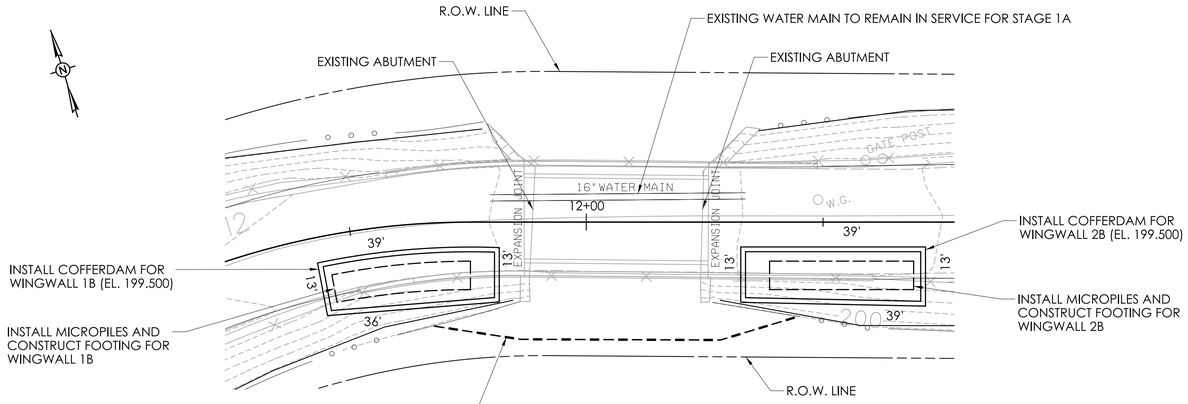

STAGE 1

SCALE: 1/16"=1'-0"

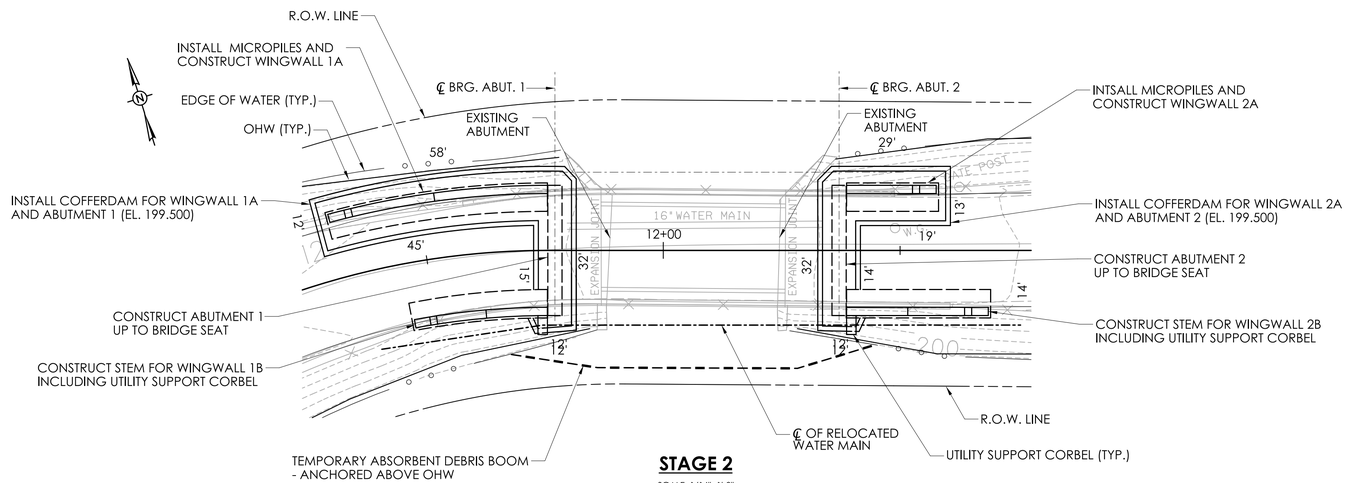

STAGE 2

SCALE: 1/16"=1'-0"

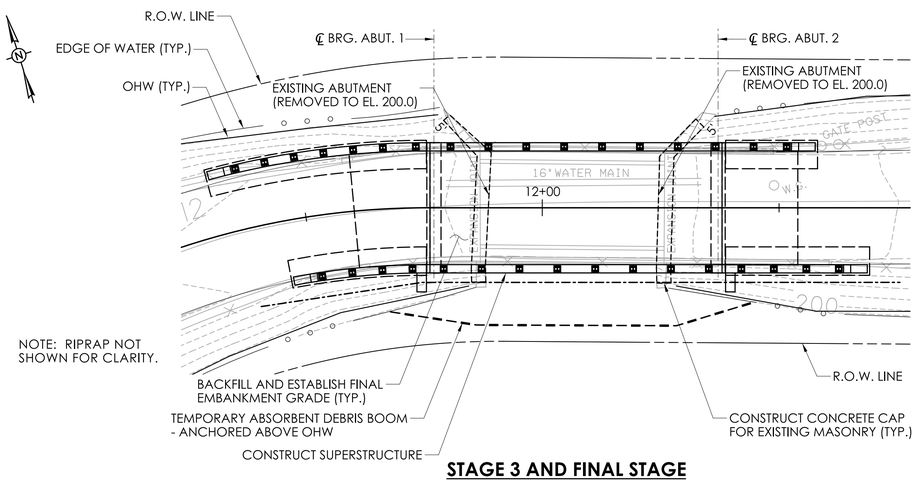

STAGE 3 AND FINAL STAGE

SCALE: 1/16"=1'-0"

SUGGESTED SEQUENCE OF CONSTRUCTION

PRE-STAGE

1. ESTABLISH DETOUR AND ROAD CLOSURE.
2. INSTALL SEDIMENTATION CONTROL SYSTEM AND TEMPORARY ABSORBENT DEBRIS BOOM.
3. PERFORM CLEARING AND GRUBBING AS NECESSARY.
4. INSTALL DEBRIS SHIELD TO EL. 201.0 MIN.
5. REMOVE EXISTING APPROACH SLABS, RETAINING WALLS, GUIDERAIL AND CHAIN LINK FENCE. EXISTING STEEL GIRDERS AND DECK TO BE MAINTAINED UNTIL WATER MAIN IS RELOCATED.

STAGE 1

6. INSTALL STAGE 1 COFFERDAM AS SHOWN.
7. INSTALL MICROPILES FOR WINGWALLS 1B AND 2B.
8. CONSTRUCT FOOTINGS FOR WINGWALLS 1B AND 2B.
9. REMOVE COFFERDAM.

STAGE 2

10. CONSTRUCT WALL CONCRETE OF WINGWALLS 1B AND 2B INCLUDING UTILITY SUPPORT CORBELS.
11. RELOCATE WATER MAIN TO PERMANENT LOCATION.
12. REMOVE ALL REMAINING COMPONENTS OF THE EXISTING SUPERSTRUCTURE.
13. SAWCUT EXISTING MASONRY AT ABUTMENTS AND WINGWALLS DOWN TO ELEVATION 200.000.
14. INSTALL STAGE 2 COFFERDAM AS SHOWN.
15. INSTALL ALL REMAINING MICROPILES.
16. CONSTRUCT ABUTMENTS 1 AND 2 UP TO BRIDGE SEAT (LOCATION OF CONSTRUCTION JOINT).
17. CONSTRUCT WINGWALLS 1A AND 2A.
18. REMOVE COFFERDAM.

STAGE 3 AND FINAL STAGE

19. CONSTRUCT CONCRETE CAPS FOR AT THE EXISTING MASONRY ABUTMENTS AND WINGWALLS.
20. BACKFILL AND ESTABLISH FINAL EMBANKMENT GRADE INCLUDING RIPRAP.
21. INSTALL STEEL GIRDERS AND DIAPHRAGMS.
22. POUR CONCRETE DECK AND INTEGRAL CONCRETE.
23. BACKFILL AND POUR CONCRETE APPROACH SLABS.
24. POUR CONCRETE CURB SECTION.
25. INSTALL 3-TUBE CURB MOUNTED BRIDGE RAIL, METAL BRIDGE RAIL PROTECTIVE FENCE, BRIDGE ATTACHMENTS, GUIDERAIL AND CHAIN LINK FENCE OFF BRIDGE.
26. ESTABLISH FINAL TRAFFIC PATTERNS.
27. REMOVE SEDIMENTATION CONTROL MEASURES UPON FINAL STABILIZATION.

TIME-OF-YEAR BMP NOTE:

ANY UNCONFINED INSTREAM WORK WITHIN THE NORTH STAMFORD RESERVOIR SHALL BE RESTRICTED TO THE PERIOD FROM JUNE 1 TO SEPTEMBER 30, INCLUSIVE.

NOTES

1. THE COFFERDAM SYSTEM SHOWN IS CONCEPTUAL. THE TYPE OF COFFERDAM STRUCTURE SHALL BE AS ELECTED AND DESIGN BY THE CONTRACTOR.
2. COFFERDAM SHALL BE ADEQUATELY DESIGNED TO WITHSTAND LATERAL EARTH PRESSURE FROM THE ADJACENT TEMPORARY UTILITY SUPPORT SYSTEM, AS APPLICABLE.

ENVIRONMENTAL PERMIT PLANS
PLAN DATE MAY 16, 2023

REV.	DATE	REVISION DESCRIPTION

DESIGNER/DRAFTER: JRA CHECKED BY: AML

SIGNATURE/BLOCK:

Stantec Consulting Services Inc.
55 Church Street
Suite 601
New Haven, CT 06510

CITY OF STAMFORD
CONNECTICUT

PROJECT NUMBER: 0135-0343
PROJECT DESCRIPTION: REPLACEMENT OF BRIDGE NO. 04069, LAKESIDE DRIVE OVER NORTH STAMFORD RESERVOIR
TOWN(S): STAMFORD
DRAWING TITLE: STAGING PLAN

DRAWING NO. PMT-07
SHEET NO. 7

LASTED SAVED BY: jabate FILE NAME: U:\CT_Projects\0135-0343\Envir\Contract_Plans\PMT-07 STAGING PLAN_MUNICIPAL.dgn
PLOTTED DATE: 5/17/2023