FEDERAL/LOCAL BRIDGE PROGRAM
State Project No. 0135-0343 (Constr.)

DRAFT FINAL

HYDRAULIC DESIGN REPORT

PROPOSED REPLACEMENT OF

BRIDGE NO. 04069

Lakeside Drive over North Stamford Reservoir

City of Stamford

Prepared by: Digitally signed by Eric W. Buckley Date: 2023.05.22 08:49:48-04'00' Date: _____
Eric Buckley

Checked by: Gregory D. Gerrish, P.E. Digitally signed by Gregory D. Gerrish, P.E. Date: 2023.05.22 09:12:44-04'00' Date: _____
Gregory D. Gerrish, P.E.

Approved by Thomas M. Ryan, P.E. Digitally signed by Thomas M. Ryan, P.E. DN: C=US, E=tryan@cjmpc.com, OU="Close, Jensen and Miller, P.C.", CN="Thomas M. Ryan, P.E." Reason: I am the author of this document Date: 2023.05.22 14:31:35-04'00' Date: _____
Thomas M. Ryan, P.E.
ConnDOT Approved Hydraulic Engineer

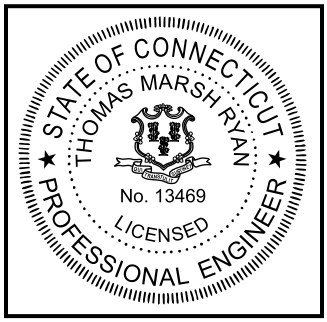

Close, Jensen and Miller, P.C.
Wethersfield, Connecticut
Issued March 2023
Revised _____

HYDRAULIC REPORT

BRIDGE NO. 04069

LAKESIDE DRIVE OVER NORTH STAMFORD RESERVOIR

CITY OF STAMFORD

TABLE OF CONTENTS

	Page
Introduction	1
Location Map	3
Hydraulic Data	7
Hydrology	
Watershed Properties	11
Peak Flow Methods Used	11
Hydraulic Analysis Methodology	13
Section location plan	15
Water Surface Profile Analysis	
Natural Condition	17
Existing Condition	17
Proposed Condition	19
Summary and Conclusion	21
Water Surface Profile Plots	22
Comparison Tables	26

APPENDICES

Appendix A – Site Photographs

Appendix B – Hydrologic Report

Appendix C – Data Collection and Field Review Forms

Appendix D – Existing Conditions Analysis

Appendix E – Proposed Conditions Analysis

Appendix F – Cross Section Plots

Appendix G – CTDOT Inspection Report

INTRODUCTION

General

Bridge No. 04069, Lakeside Drive over North Stamford Reservoir in Stamford, is scheduled for replacement as part of the Federal Local Bridge (Design Managed by State) Program. This Hydraulic Analysis Report is prepared to satisfy the requirements of the CTDOT Drainage Manual for this project. A Hydrologic Report prepared January 30, 2023 (approved March 7, 2023) has been prepared and submitted prior to the preparation of this report, and documents the development of design flows and starting water surface elevations to be applied to the hydraulic design of this bridge. Though the Rippowam River both upstream and downstream of the North Stamford Reservoir has been studied in detail, Bridge No. 04069 is within a reach of the Rippowam River/North Stamford Reservoir which has not been studied in detail for the Fairfield County Flood Insurance Study (FIS), prepared by the Federal Emergency Management Administration (FEMA). Rather, the bridge site sits within an approximate flood zone (Zone A). As such, this hydraulic analysis report will both document the hydraulic design of this project as well as show adherence to the State of Connecticut Flood Management Statutes. A Scour Analysis Report is also prepared under separate cover to support foundation design requirements.

The hydraulic engineer visited the site to perform an evaluation, layout hydraulic cross sectioning for survey, and complete the "Data Collection and Field Review" portion of this report. Natural, existing, and proposed conditions of this project have been analyzed to satisfy the requirements of Section 13a-94 and Sections 25-68b through 25-68h of the Connecticut General Statutes, as revised.

Existing Site Conditions

Bridge No. 04069, built in 1936 and reconstructed in 1993, is a single span reinforced concrete deck superstructure with steel multi-girders embedded into reinforced concrete bridge seats. The superstructure is supported by stone masonry abutments and wingwalls. The total structure length is 40 feet with a max span length of 36 feet. The bridge roadway width from curb-to-curb measures 23 feet 3 inches and has an out-to-out width of 24 feet 10 inches. A new wearing surface was installed in 2017 with no known waterproofing membrane. The roadway provides one lane of traffic in each direction with no shoulders. Lakeside drive is an urban local road supporting an average daily traffic count of 5485 vehicles per day.

The **deck** is in good condition (overall rating = 7) and the approach is in satisfactory condition (overall rating = 7). At each deck end, there are cracks to the bituminous overlay opening up to full width by ¼ of an inch wide. The deck overhangs are exposed and have transverse cracks with efflorescence. The concrete rail bases exhibit random vertical and horizontal cracks with efflorescence, pop-outs and minor impact scrapes. Metal bridge rail is continuous across the bridge and has random impact scrape damage. There is a chain link fence along the bridge rail showing 100 percent section loss at northeast corner bottom rail and minor bend in the bottom rail at the south east corner. There are no significant deficiencies to the bituminous approach pavement. Approach metal beam guiderails have minor impact scrapes with light surface rust. Northeast approach guiderail has a 30' long x 1' deep bent area of

moderate impact damage with a bent and tilted post at 60 feet from the bridge. Bridge railings do not meet current standards.

The **superstructure** is in serious condition (overall rating = 3). The girders experience numerous locations of section loss. Near mid span of girder one, the bottom flange has section loss with as little as 5/16th of an inch missing. The webs near the abutments have section loss up to full height by 1/8th of an inch deep. The bottom flanges of the interior girders have 1/16th of an inch-deep pitting throughout. The bottom flange section loss is between 25 and 35 percent. Previous areas of section loss have been painted over which appear fine. There are other areas of peeling paint, mainly at girder ends and bottom flanges, up to 20 percent of the total area. The diaphragm connection plates and bolts have peeling paint with light rust. The top of bottom flanges exhibits heavy bird debris.

The **substructure** is in satisfactory condition (overall rating = 6). The Substructure is in satisfactory condition. The abutment stems comprised of masonry have up to 10 percent cracked/deteriorated mortar. Along the joint are areas of heavy efflorescence. The reinforced concrete backwall has random map cracks up to 1/8th of an inch wide and spalls/voids below the bottom flanges of the girder up to full width. Up to 10 percent of the stone masonry wingwalls have cracked and deteriorated mortar. Wingwall 1A has a 2-foot-wide by 1 foot high by 5-inch-deep spall in the concrete. Scour was rated an 8 per the 2020 underwater inspection report.

The **channel and channel protection** are in satisfactory condition (overall rating = 6). The 2020 Underwater Inspection Report indicates there has been little change since the 2016 inspection with aggradation up to 2.8' and degradation up to 2.0'. Located at the north channel is a 40-foot turbidity curtain extending outwards from both abutments. At the time of inspection there was little to moderate flow below the bridge with an underclearance of 16.1 feet.

Recommended Rehabilitation

Based upon field investigation and engineering analysis of this structure, the existing structure is found to have structural deficiencies. The deficiencies are due to the serious condition of the superstructure. For this reason, it is recommended to replace the crossing. The recommended superstructure is composed of galvanized steel beam superstructure and 8.5-inch reinforced concrete deck on micropile-supported reinforced concrete abutments. The proposed structure will have an overall length of approximately 60-feet. The proposed abutments will be installed behind the existing, and the existing abutments shall remain in place and cut down to allow the proposed beams to span over. Re-use of the existing substructure was considered and dismissed due to overloading as a result of the increase in superstructure weight.

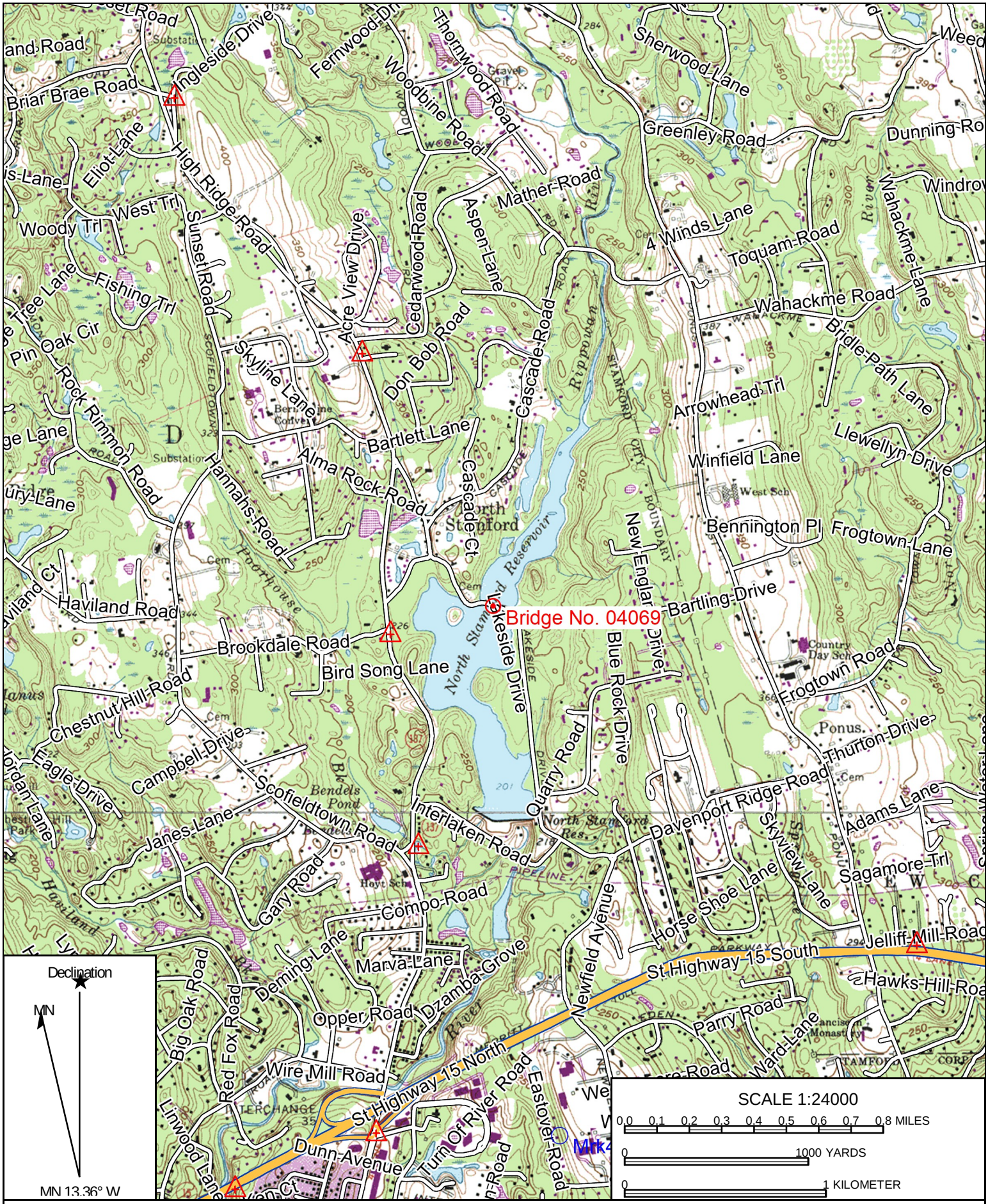

Name: POUND RIDGE
Date: 05/15/18
Scale: 1 inch = 2,000 ft.

Location: 041° 08' 03.93" N, 073° 32' 24.48" W
Lakeside Drive Over North Stamford Reservoir

Copyright (C) 2009 MyTopo

National Flood Hazard Layer FIRMette

FEMA

41°8'17.52"N

73°32'43.18"W

73°32'5.72"W

41°7'50.42"N

Feet 1:6,000

0 250 500 1,000 1,500 2,000

Legend

SEE FIS REPORT FOR DETAILED LEGEND AND INDEX MAP FOR FIRM PANEL LAYOUT

SPECIAL FLOOD HAZARD AREAS
- Without Base Flood Elevation (BFE) *Zone A, V, A99*
- With BFE or Depth
- Regulatory Floodway *Zone AE, AO, AH, VE, AR*

OTHER AREAS OF FLOOD HAZARD
- 0.2% Annual Chance Flood Hazard, Areas of 1% annual chance flood with average depth less than one foot or with drainage areas of less than one square mile *Zone X*
- Future Conditions 1% Annual Chance Flood Hazard *Zone X*
- Area with Reduced Flood Risk due to Levee. See Notes. *Zone X*
- Area with Flood Risk due to Levee *Zone D*

OTHER AREAS
- NO SCREEN Area of Minimal Flood Hazard *Zone X*
- Effective LOMRs
- Area of Undetermined Flood Hazard *Zone D*

GENERAL STRUCTURES
- Channel, Culvert, or Storm Sewer
- Levee, Dike, or Floodwall

OTHER FEATURES
- B 20.2 / 17.5 Cross Sections with 1% Annual Chance Water Surface Elevation
- 8 Coastal Transect
- 513 Base Flood Elevation Line (BFE)
- Limit of Study
- Jurisdiction Boundary
- Coastal Transect Baseline
- Profile Baseline
- Hydrographic Feature

MAP PANELS
- Digital Data Available
- No Digital Data Available
- Unmapped

N

This map complies with FEMA's standards for the use of digital flood maps if it is not void as described below. The base map shown complies with FEMA's base map accuracy standards

The flood hazard information is derived directly from the authoritative NFHL web services provided by FEMA. This map was exported on 6/18/2018 at 1:43:23 PM and does not reflect changes or amendments subsequent to this date and time. The NFHL and effective information may change or become superseded by new data over time.

This map image is void if the one or more of the following map elements do not appear: base map imagery, flood zone labels, legend, scale bar, map creation date, community identifiers, FIRM panel number, and FIRM effective date. Map images for unmapped and unmodernized areas cannot be used for regulatory purposes.

LOCATION MAP

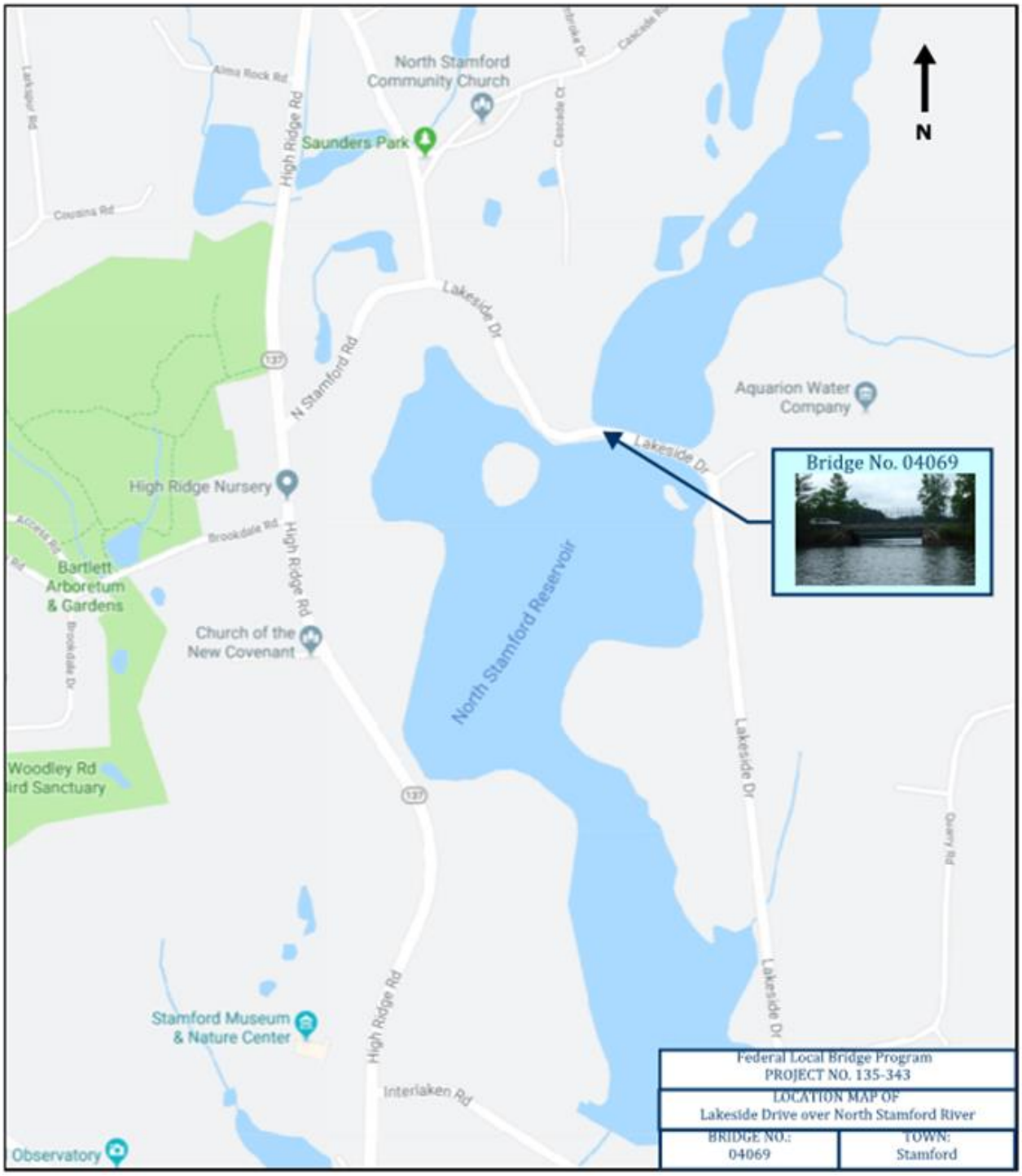

AERIAL VIEW

Bridge No.
04069
Google
Federal Local Bridge Program
PROJECT NO. 135-343
Aerial MAP OF
Lakeside Drive over North Stamford River
BRIDGE NO.:
04069
TOWN:
Stamford

HYDRAULIC DATA

1) Location

a) Town(s): Stamford State Project No.(s): 0135-0343

b) Highway: Lakeside Drive Station(s):

c) Location Relative to Highway Landmark: 2500 feet east of High Ridge Road (SR 137)

d) Stream: North Stamford Reservoir / Rippowam River

e) Location Relative to Stream Landmark: 4000 feet north of North Stamford Reservoir Dam

2) Design Flood

a) Hydrologic Procedure Used for Design: Regional Regression Equation frequency curve adjusted to the target 100-year flow (at dam spillway)

b) Hydrologic Procedure Used by FEMA:

c) Drainage Area: 21.5 Square Miles

d) ConnDOT Drainage Manual Structure Classification: Large

e) Design Storm Frequency: 100-year

f) Required Underclearance at Design Discharge: 2-feet

g) Design Discharge:

i. D.O.T. Design: 3690-cfs

ii. FEMA:

iii. SCEL:

3) Hydraulic Analysis Procedure

a) Model Used and Version No.: HEC-RAS v. 6.3.1

b) Flow Regime: Sub-Critical

c) Boundary Conditions (starting water surface at the ends of the river system – i.e. known water surface, normal depth, critical depth, rating curve, etc.):

i. Downstream: Known WSEL developed from spillway rating curve of North Stamford Reservoir dam

ii. Upstream:

d) Other Method(s):

4) Hydraulic Control (i.e. culvert/bridge, dam (weir), channel construction, tide, known water surface elevation, etc.)

a) Type of Control: North Stamford Reservoir Dam

b) Location Relative to Proposed Construction: 4000 feet south

5) Coefficients of Roughness

a) Downstream: Channel 0.025 Overbank 0.08

b) At Crossing: Channel 0.025 Enclosed Conduit _____

c) Upstream: Channel 0.025 Overbank 0.08

6) Existing Structures

Upstream: None within hydraulic influence of project

a) Type:

b) Gross Waterway Opening:

At Site:

a) Type: Single span reinforced concrete deck on steel multi-girders

b) Gross Waterway Opening: 914 sq. ft.

c) Effective Waterway Opening: 875 sq. ft.

d) Overall Width of Waterway Opening: 35.9 feet

e) Effective Depth of Waterway Opening: 24.4 feet (Hyd Depth upstream)

f) Minimum Low Chord Elevation: 202.3 feet (NAVD '88)

g) Minimum Roadway Elevation: 203.7 feet (NAVD '88) - approx 150 feet east of bridge

h) Computed Water Surface Elevation at Approach Section Upstream of Structure at Design Discharge: 201.5 feet (NAVD '88) at section 4

i) Underclearance at Design Discharge: 0.8 feet, referenced from WSEL at approach section

j) Mean Velocity of Channel: 4.2 fps (BR Open Vel)

Downstream:

a) Type: North Stamford Reservoir Dam

b) Gross Waterway Opening: N/A

7) Proposed Structure

a) Type: galvanized steel beam superstructure with a reinforced concrete deck.

b) Gross Waterway Opening: 946 sq. ft.

c) Effective Waterway Opening: 890 sq. ft. (BR U)

d) Overall Width of Waterway Opening: 53.7 feet (topwidth at design discharge, effective width = existing width)

e) Effective Depth of Waterway Opening: 24.4 feet (no change from existing)

f) Minimum Low Chord Elevation: 202.2 feet (NAVD '88)

g) Minimum Roadway Elevation: 203.7 feet (NAVD '88) - approx 150 feet west of bridge

h) Computed Water Surface Elevation at Approach Section Upstream of Structure at Design Discharge: 201.5 feet (NAVD '88) at Section 4

i) Maximum Regulatory Elevation: 202.3 feet (1' over natural) at section 4

j) Other Controlling Water Surface Elevation (If Below Maximum Regulatory Elev.): N/A

k) Difference in Water Surface Elevation (Approach Section) Proposed vs. Existing and Proposed vs. Regulatory @ Design Discharge: Proposed vs. Existing = 0 feet
Proposed vs. Regulatory = -0.8 feet

l) Underclearance at Design Discharge with Respect to Structure Low Chord: 0.7 feet, referenced from WSEL at approach section

m) Mean Velocity Through Structure: 4.1 fps (Br. Open Vel)

8) Remarks

a) Navigational Requirements: N/A

b) Tidal Conditions: N/A

c) Record Floods: 9/1938, 8/1955

d) Average Daily Flow: 38-cfs

$$(Q_{AD}(cfs) = [A\,(sm)]^{0.98} * 1.87)$$

e) Average Spring Flow: 75-cfs

$$(Q_{AS}(cfs) = [A\,(sm)]^{0.988} * 3.62)$$

f) Flood Hazard Zone: A (approximate)

g) Vertical Datum: NAVD '88

HYDROLOGY

Watershed Properties

The drainage area of North Stamford Reservoir / Rippowam River at the control point of the reservoir (dam and spillway) is delineated to be 21.5 square miles using StreamStats Version 4.11.1. The watershed is part of the Rippowam River Basin (Basin No. 7405) as identified on a map titled "Natural Drainage Basins in Connecticut," compiled by the State of Connecticut Department of Energy and Environmental Protection (CTDEEP) 1981, revised 1991. This subregional drainage basin is part of the Southwest Coastal Major Basin. The drainage area is within Fairfield County, CT and Westchester County, NY. It is located within the United States Geological Survey (U.S.G.S.) quadrangle sheets, Pound Ridge (106) and Peach Lake (90). Bridge No. 04069 is a large structure, i.e., drainage area greater than 10 square miles and less than 1,000 square miles; therefore, in accordance with the CTDOT Drainage Manual, the design storm is the 100-year event.

Approximately 64% of the watershed is characterized as wooded area and 22% is developed, including developed open space). Additionally, 9% is classified as wetland area and 1% is open water.

The total drainage path length measures approximately 4.4 miles. The watershed has an average main channel slope of approximately 33 feet/mile.

Major flood events occurred at this site in November 1927 (100-year), August 1955 (<100-year), October 1955 (500-year), January 1978 (50-75-year), and January 1979 (50-year), though the existing structure has only been in place since 1936.

Peak Flow Methods Used

Design storm flows were developed based in part with the frequency distribution curve developed using the 2020 Connecticut Regional Regression Equations (RRE) and on design parameters of the North Stamford Reservoir Dam and Spillway.

The approach was to develop a performance rating curve of the dam to establish the estimated 100-year flow over the spillway based on limited information gathered from Aquarion (owner of the dam) and information archived with the National Inventory of Dams. From this flow rate and the developed frequency curve slope from the RRE, the typical bridge design event frequencies can be estimated by shifting the RRE curve to agree with the calculated 100-year flow rate of the spillway rating curve.

Recommended Peak Flows

The following table presents the recommended flow rates for hydraulic design. The detailed analysis is offered in the Hydrologic Report, issued January 2023, included in Appendix B.

Table 1 – Recommended flow rates for rehabilitation of Bridge No. 04069

Frequency	Discharge Rate
2-yr	900-cfs
10-yr	1960-cfs
25-yr	2440-cfs
50-yr	3130-cfs
100-yr	3690-cfs
200-yr	4295-cfs
500-yr	5160-cfs

HYDRAULIC ANALYSIS METHODOLOGY

Hydraulic analysis of Bridge No. 04069 is performed using the Hydrologic Engineering Center's River Analysis System (HEC-RAS) version 6.3.1. A plan view of the river, showing the arrangement of surveyed river cross-sections is shown following this page.

The flow that Bridge 04069 carries Lakeside Drive over is controlled by the head over the dam containing the reservoir pool. Reservoirs such as this can be considered to be a level pooling area with very low velocities. While this is true in principle, flow is still entering the reservoir and exiting over the spillway. At design events in situations such as this, it can be expected that there is a minor head gradient from one side of the reservoir to the other, separated by the constriction of the relatively small flow area of the bridge compared to the reservoir flow area. This report and analysis are prepared to present the hydraulics of that head differential to further an evaluation of scour potential of the crossing.

Based on routine and underwater inspection reports of the condition of the bridge, normal pool elevation provides for 25+ feet of depth making hydraulic survey problematic without a boat and sounding equipment. For this analysis, a sounding plan taken from the 2020 Underwater Bridge Inspection is used to define the channel bottom at and about the bridge. This sounding plan presents a grid of 10-foot spacing of streambed elevations referenced from the upstream western low chord of the bridge (datum 0.0). Within the "approach reach" of the bridge constriction, this grid extends longitudinally approximately 50 feet upstream from the bridge face, and in the "exit reach" approximately 40 feet from the downstream bridge face. Laterally in the approach reach, the grid extends approximately 80' centered about the bridge span and in the exit reach approximately 40' centered about the span. The documented bed elevations are adjusted based on the surveyed low chord elevation of 202.3 feet, NAVD '88. This grid is then georeferenced into the project survey and adjacent digital elevation model (DEM)[1] to relate the streambed elevations to the banks and high ground of the area. Outside of the grid, there is no information on the reservoir bathymetry, and as such, an assumption is made of a constant grade from the edge of the sounding data up to the bank elevation of the DEM.

For this hydraulic analysis, only 4 sections are applied as required to complete a HEC-RAS model. Section 4 is set 50 feet upstream from the upstream bridge face, at the upstream limits of the sounding plan. Section 3 is set at the toe of the causeway embankment as the upstream bounding section. Section 2 is set at the toe of the causeway embankment as the downstream bounding section and section 1 is set 40 feet from the downstream bridge face. Bridge internal sections are also updated based on the sounding plan at the internal section locations. While section 4 and section 1 are not set at the limits of the contraction and expansion reaches, respectively, this approximation will provide the necessary results to develop hydraulic parameters, not only for hydraulic design but also scour analysis of the proposed crossing. In addition, ineffective flow areas are set at sections 4, 3, 2 and 1 based on a 1:1 contraction reach and a 2:1 expansion reach. These ineffective flow areas reduce the influence of the constant grade assumption between the limits of the sounding plan and the known bank elevations from the DEM data used.

---

[1] Continuously Updated Digital Elevation Model (CUDEM) – 1/9 Arc-Second Resolution Bathymetric-Topographic Tiles, maintained by NOAA National Centers for Environmental Information

A Manning's Roughness Coefficient of 0.025 is used for the reservoir bottom and 0.08 is used for the overbanks, both upstream and downstream (though will not come into play due to the ineffective flow areas). Contraction and expansion coefficients for sections 4, 3, and 2 are set at 0.3 and 0.5 as typical for bridge evaluations, though it is not expected that much headloss would be realized for these shock losses. Section 1 has contraction and expansion coefficients of 0.1 and 0.3 for unimpeded flow.

Due to the tailwater control of this evaluation, the modeling is run for a subcritical solution. The starting water surface elevations (boundary conditions) are based on weir flow elevations for each flow rate considered, derived from the spillway rating curve developed as part of the hydrologic design. The dam itself is not included in the modeling.

All elevations referenced in this report refer to the NAVD '88 unless otherwise specified.

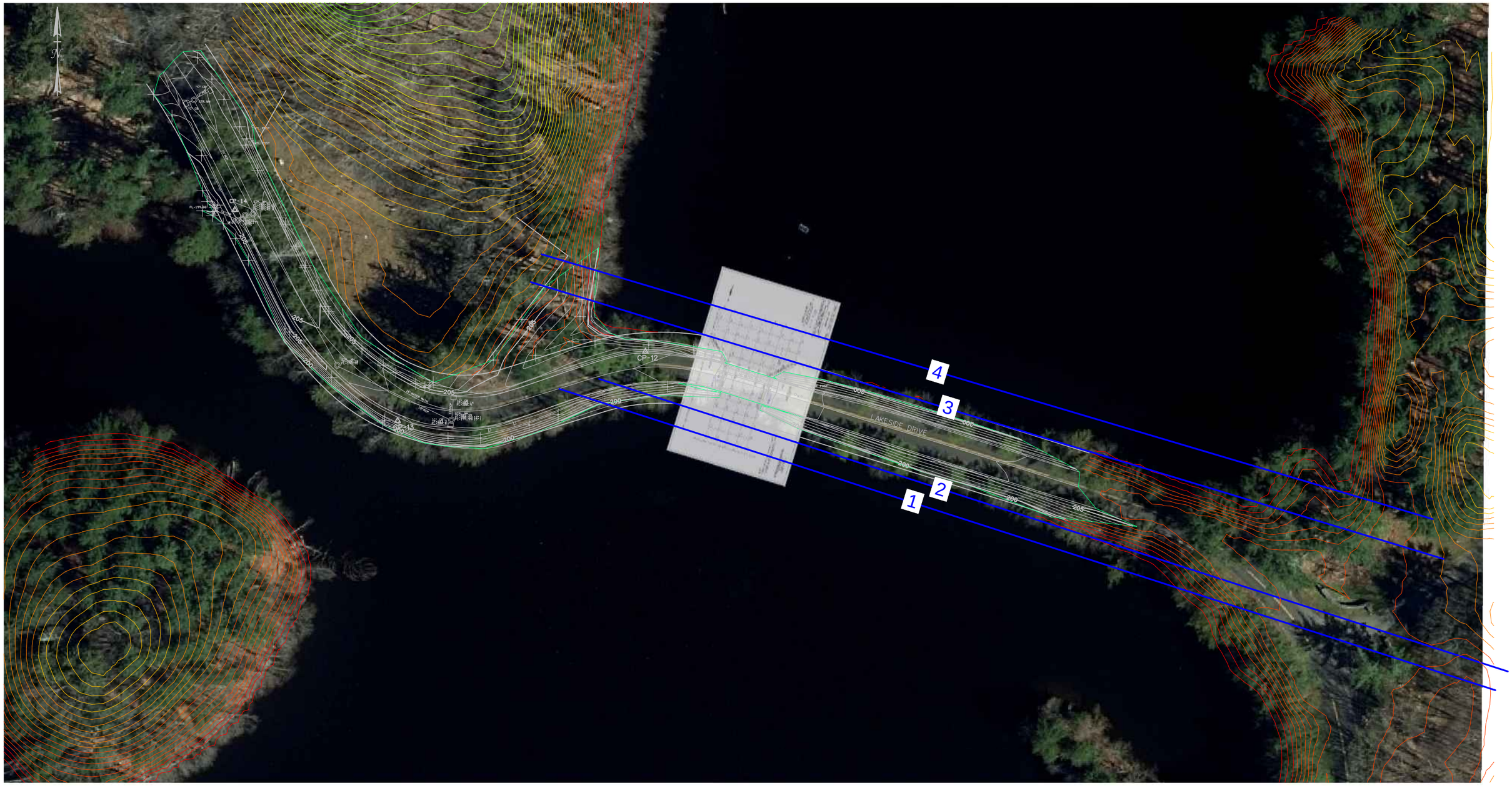

SCALE 1" = 80'

80 40 0 80

SECTION LOCATION PLAN

AERIAL PHOTO WITH SURVEY

CITY/TOWN:	BRIDGE NO.
STAMFORD	04069
STATE PROJECT NO.: 0135-0343	DATE: MARCH 2023

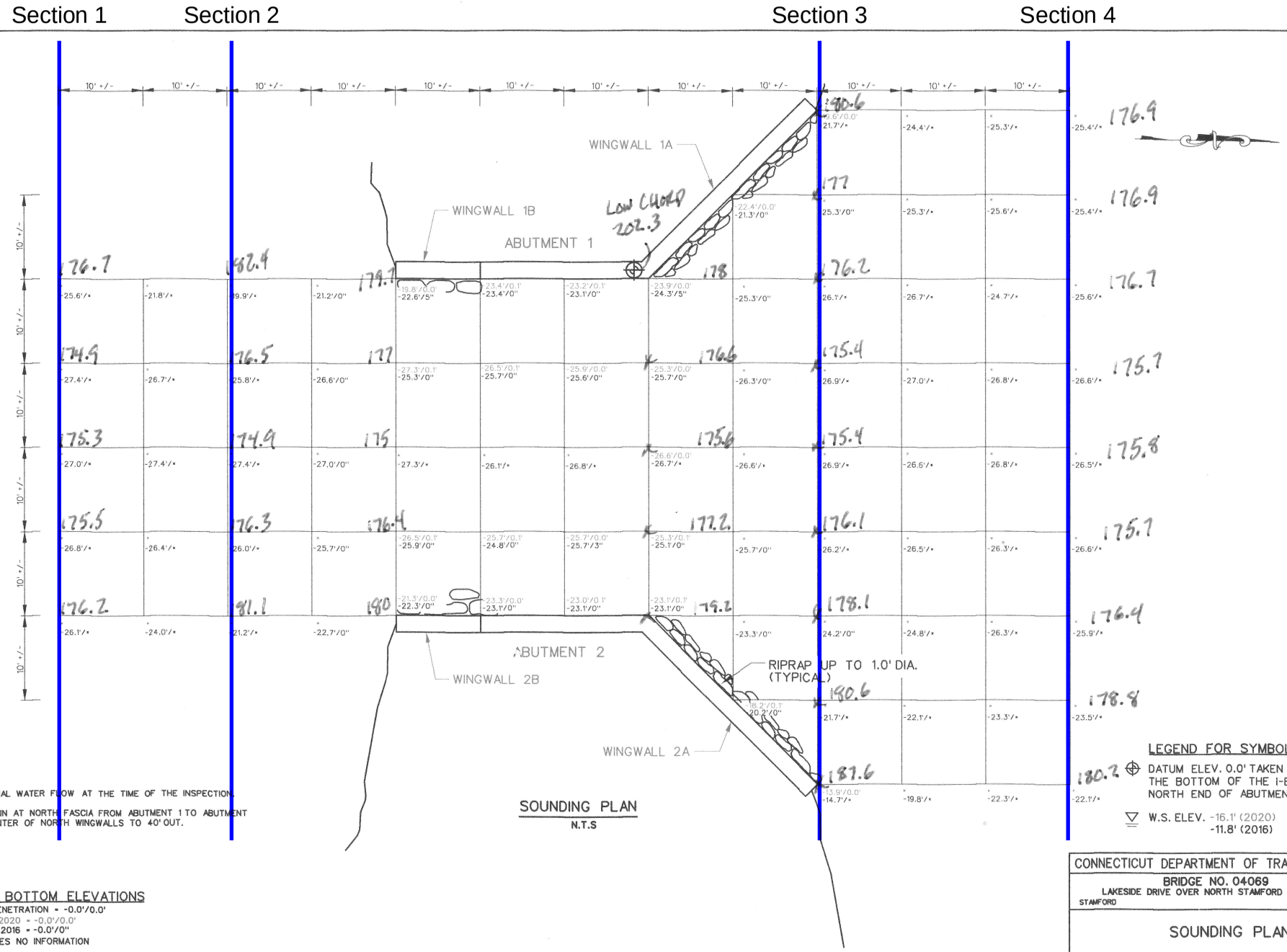

SOUNDING PLAN
N.T.S

NOTE:

1. THERE WAS MINIMAL WATER FLOW AT THE TIME OF THE INSPECTION.
2. TURBIDITY CURTAIN AT NORTH FASCIA FROM ABUTMENT 1 TO ABUTMENT 2 AND FROM CENTER OF NORTH WINGWALLS TO 40' OUT.

LEGEND FOR BOTTOM ELEVATIONS

ELEVATION/PENETRATION = -0.0'/0.0'
OCT. 2020 = -0.0'/0.0'
OCT. 2016 = -0.0'/0"
= INDICATES NO INFORMATION

LEGEND FOR SYMBOLS

180.2 ⊕ DATUM ELEV. 0.0' TAKEN FROM THE BOTTOM OF THE I-BEAM AT THE NORTH END OF ABUTMENT 1.

▽ W.S. ELEV. -16.1' (2020)
-11.8' (2016)

CONNECTICUT DEPARTMENT OF TRANSPORTATION
BRIDGE NO. 04069
LAKESIDE DRIVE OVER NORTH STAMFORD RESERVOIR
STAMFORD CONNECTICUT

SOUNDING PLAN

INSPECTED BY: CGS REVISED BY: RNV	SCALE: AS SHOWN	DATE OF INSPECTION 10/15/2020	DRAWING NO. 04069A

WATER SURFACE PROFILE ANALYSIS

Natural Condition

The natural condition is typically simulated by eliminating all of the structures along the studied reach. In this case, the natural condition would be the level pool associated with the head over the North Stamford Reservoir Dam, as with no constriction within the reservoir, there would be no hydraulic features to affect this reservoir pooling elevation. A hydraulic model has not been prepared for this evaluation. Typically, the appropriate approach in determining backwater from a subject structure would be to remove all influential structures along the study reach, and compare that to an analyzed reach with only the subject structure in place. This would remove all other influences from the actual backwater of the subject structure. In this case, removing the dam from the model would be problematic in that a natural condition (had the dam not been built) could not efficiently be estimated.

The design flow used in the analysis is the 100-year storm flow of 3690-cfs. The headwater to the North Stamford Dam has been evaluated to be 201.3 feet. This will be the natural condition flow elevation for the studied reach.

Existing Condition

The existing condition is evaluated by passing the 100-year storm flow of 3690-cfs through the existing bridge constriction located at section 2.5. The existing bridge opening and geometry are obtained through a field survey prior to the hydraulic analysis. Reservoir bathymetry and floodplain topography are obtained as discussed in the Hydraulic Analysis Methodology section of this report.

The water surface elevation for the 100-year flood event of the approach section to the bridge (river station 4) for the existing condition is 201.52 feet. The water surface elevation at the upstream bounding section to the bridge (river station 3) for the 100-year flood is 201.47 feet.

The computed water surface elevation at the upstream face of the existing bridge section for the 100-year storm is 201.19 feet. This water surface elevation indicates free surface flow through the crossing as the low chord of the existing bridge is 202.30 feet. Weir flow is not achieved as the minimum roadway surface elevation is 203.7 feet at the east approach (approximately 150 feet from the crossing).

A comparison of the existing condition profile to the proposed conditions will be noted in the summary and conclusion section.

Printouts of HEC-RAS standard Table 1 and the Bridge Output table are included in Appendix E. The water surface elevation profile plot for the existing condition is shown on the next page.

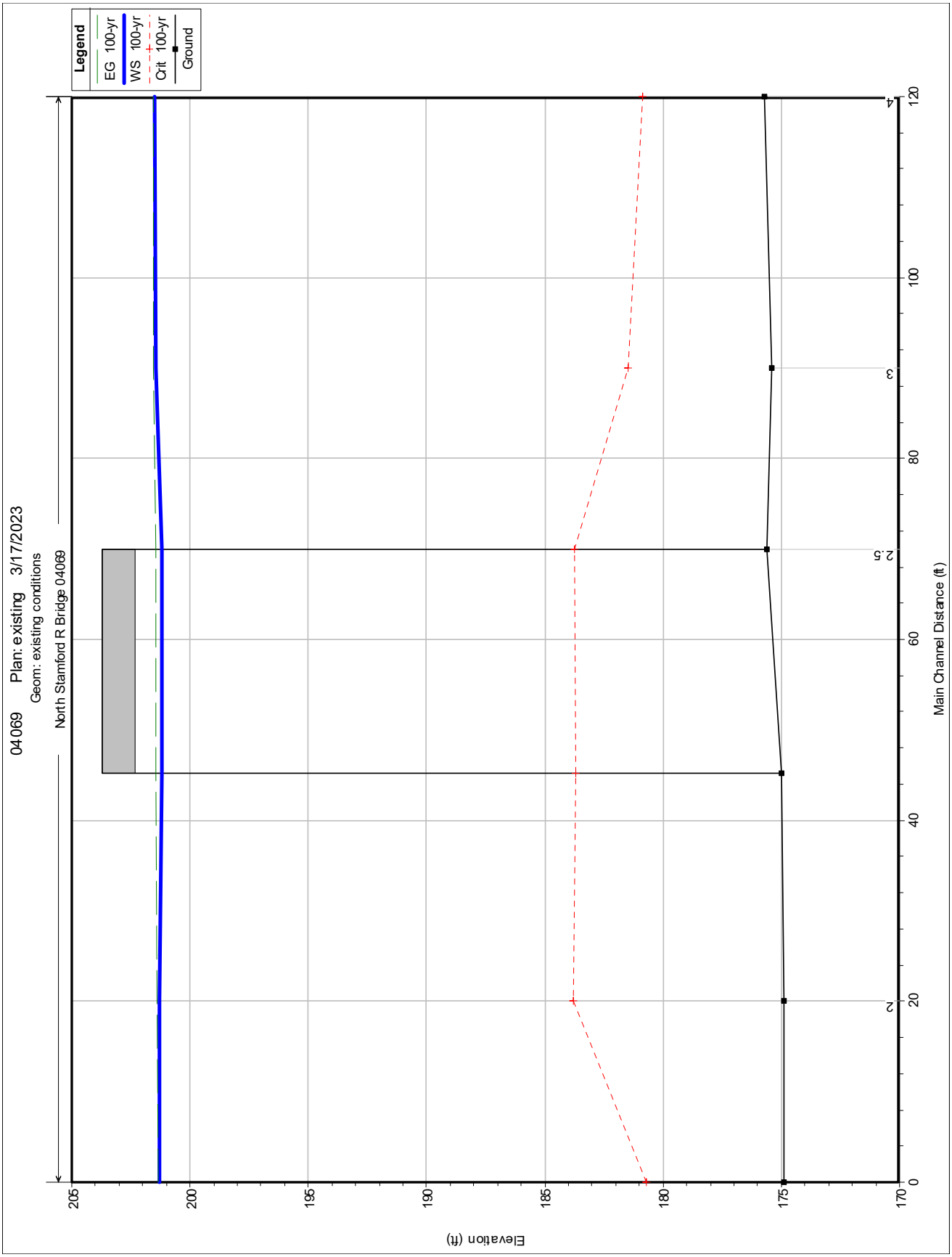

Figure 1 – Existing Condition 100-year Profile

Proposed Condition

The proposed work for the rehabilitation of this crossing consists of removing the existing superstructure and cutting down the existing abutments to make way for the proposed superstructure. Proposed abutments will be constructed behind the existing.

Hydraulic evaluation is conducted by running the 100-year storm flow of 3690-cfs through the proposed constriction located at section 2.5. This run utilized the existing conditions geometric model with the proposed bridge geometry depicted in the construction plans replacing the existing conditions structure.

The water surface elevation for the 100-year flood event at the upstream limit of the study (river station 4) for the rehabilitated condition is 201.51 feet. The water surface elevation at the upstream approach section to the bridge (river station 3) for the 100-year flood is 201.47 feet.

The computed water surface elevation at the upstream face of the rehabilitated bridge section for the 100-year storm is 201.20 feet. This water surface elevation indicates free surface flow through the crossing as the low chord of the existing bridge is 202.20 feet. Weir flow is not achieved as the minimum roadway surface elevation is 203.7 feet at the east approach (approximately 150 feet from the crossing).

A comparison of the proposed condition profile to the existing conditions will be noted in the summary and conclusion section.

Printouts of HEC-RAS standard Table 1 and the Bridge Output table are included in Appendix F. The water surface elevation profile plot for the proposed condition is shown on the next page.

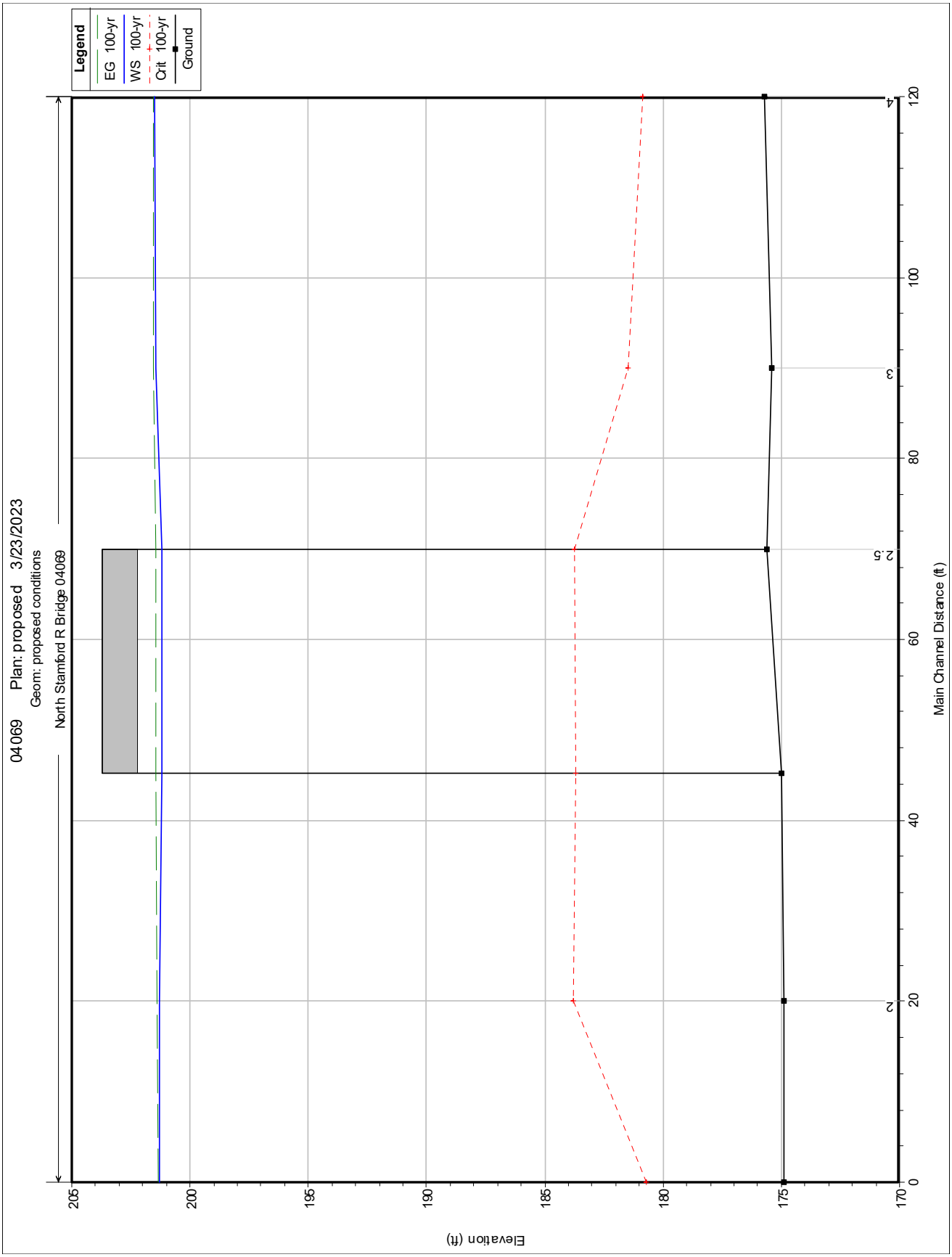

Figure 2 – Proposed condition 100-year profile

SUMMARY AND CONCLUSION

It is shown in the preceding section that for the design flow event, the existing condition and proposed replacement perform with equal efficiency. The flow profile of the reservoir is controlled by the North Stamford Reservoir Dam. Existing conditions as designed provides for 0.8 feet of underclearance and 2.2 feet of freeboard to the low point of the travelway. Proposed conditions provide for 0.7 feet of underclearance and 2.2 feet of freeboard. The reduction in underclearance is due to the increase in span and superstructure thickness. This cannot be remedied through additional vertical profile increases without increasing the causeway fill and reducing the volume of available reservoir storage. Modeling indicates, however, that the 500-year event still passes the proposed crossing under free surface conditions, and that the low chord of the bridge will not get wet during the hydraulic check flood event. As designed, the proposed crossing does meet the 1-foot of freeboard, but not the 2 feet of underclearance (based on the large structure designation). For this project however, lower design criteria would be acceptable as this is a local road with an alternative route (detour), the expected flood discharge will not overtop the roadway, and the proposed flow elevation does not increase by more than one foot or increase flooding potential to upstream properties.

The following sections present the calculated water surface profiles for the existing, natural, and proposed structure rehabilitation.

WATER SURFACE PROFILE PLOTS

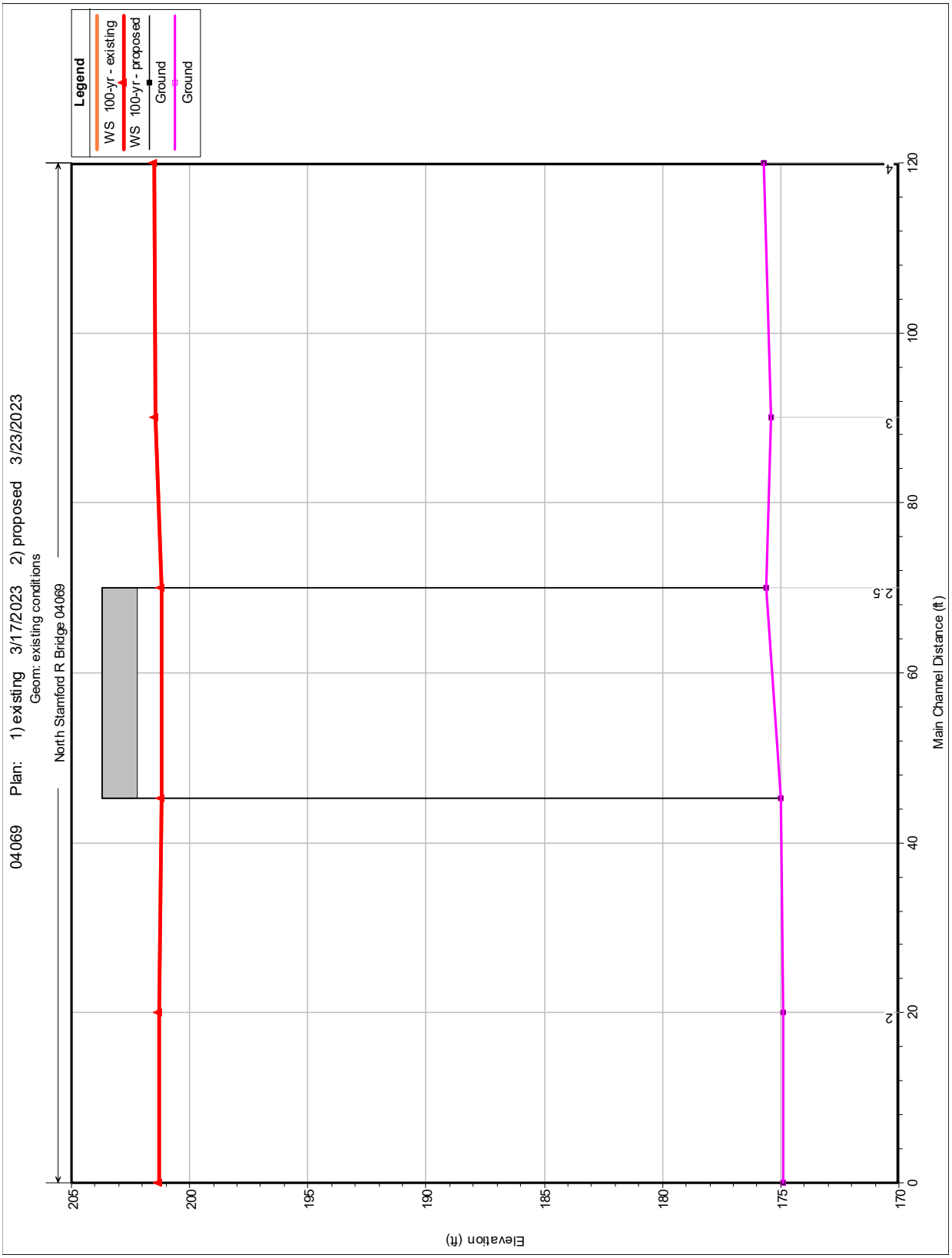

Figure 3 – Existing and proposed 100-year design flow profile (Natural not shown as it was not modeled. Natural condition profile would be constant at 201.3 feet).

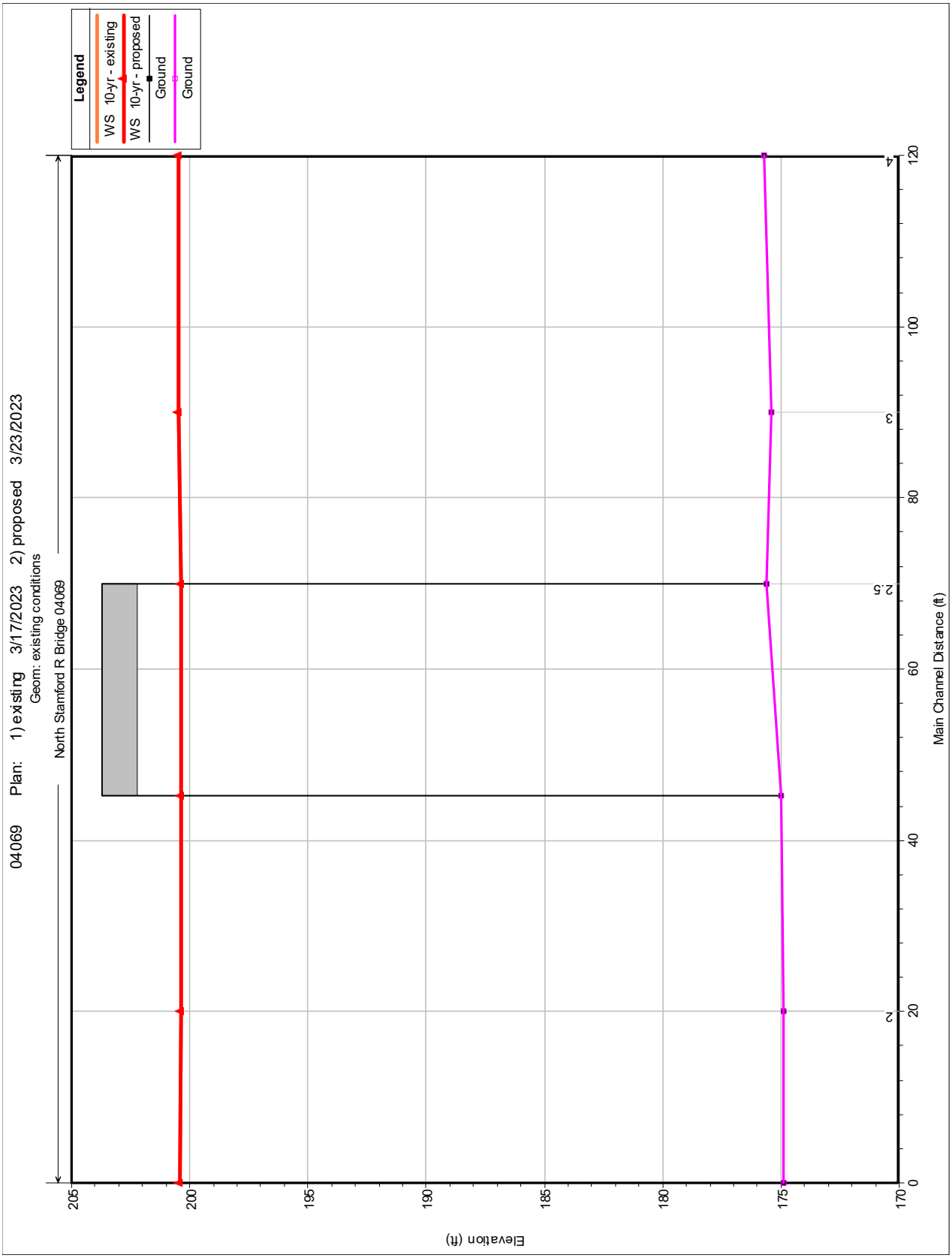

Figure 4 – Existing and proposed 10-year flow profile

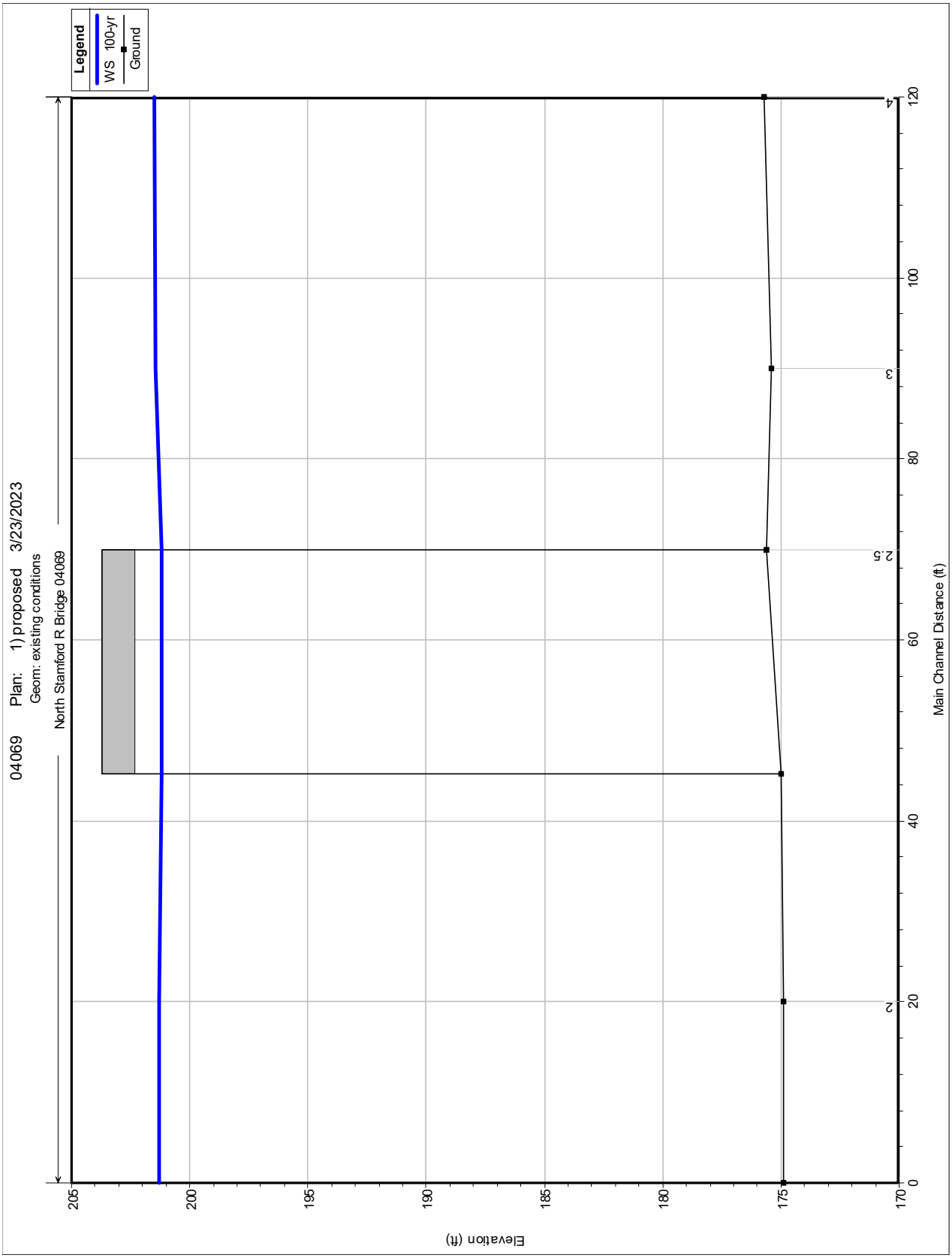

Figure 5 – Proposed 100-year flow profile

COMPARISON TABLES

Table 2 – Proposed vs. Existing and Proposed vs. Natural 100-year flow elevations.

River Sta	Existing W.S. Elev (ft)	Proposed W.S. Elev (ft)	Natural W.S. Elev (ft)	Difference Proposed vs. Existing (ft)	Difference Proposed vs. Natural (ft)
4	201.52	201.51	201.3	-0.01	0.21
3	201.47	201.47	201.3	0	0.17
2.5		Bridge			
2	201.27	201.27	201.3	0	-0.03
1	201.3	201.3	201.3	0	0

Table 3 – Proposed vs. Existing 10-year flow elevations

River Sta	Existing W.S. Elev (ft)	Proposed W.S. Elev (ft)	Difference Proposed vs. Existing (ft)
4	200.47	200.47	0
3	200.45	200.45	0
2.5	Bridge		
2	200.39	200.39	0
1	200.4	200.4	0

Table 4 – Proposed vs. Existing 100-year flow velocity

River Sta	Existing Vel Chnl (ft/s)	Proposed Vel Chnl (ft/s)	Difference Proposed vs. Existing (ft/s)
4	1.34	1.34	0
3	2.01	2.01	0
2.5	4.22	4.14	-0.08
2	2.75	2.75	0
1	1.87	1.87	0

Table 5 – Proposed vs. Existing 10-year flow velocity

River Sta	Existing Vel Chnl (ft/s)	Proposed Vel Chnl (ft/s)	Difference Proposed vs. Existing (ft/s)
4	0.74	0.74	0
3	1.11	1.11	0
2.5	2.32	2.31	-0.01
2	1.52	1.52	0
1	1.03	1.03	0

Appendices

Appendix A – Site Photographs
Appendix B – Hydrologic Report
Appendix C – Data Collection and Field Review Forms
Appendix D – Existing Conditions Analysis
Appendix E – Proposed Conditions Analysis
Appendix F – Cross Section Plots
Appendix G – CTDOT Inspection Report

Appendix A – Site Photographs

1. Lakeside Drive looking East

2. South Elevation of Bridge

3. North Elevation of Bridge

4. East Abutment

Appendix B – Hydrologic Report

FEDERAL LOCAL BRIDGE PROGRAM

State Project No. 0135-0343 (Constr.)

FINAL

HYDROLOGIC REPORT

BRIDGE NO. 04069

Lakeside Drive over North Stamford Reservoir

City of Stamford

Prepared by: Digitally signed by Eric W. Buckley Date: 2023.03.24 10:06:41-04'00' Date: _____

Eric Buckley

Checked by: Gregory D. Gerrish, P.E. Digitally signed by Gregory D. Gerrish, P.E. Date: 2023.03.24 10:11:22-04'00' Date: _____

Greg Gerrish, P.E.

Approved by: Thomas M. Ryan, P.E. Digitally signed by Thomas M. Ryan, P.E. DN: C=US, E=tryan@cjmpc.com, OU="Close, Jensen and Miller, P.C.", CN="Thomas M. Ryan, P.E." Reason: I am the author of this document Date: 2023.03.27 10:18:30-04'00' Date: _____

Thomas M. Ryan, P.E.

ConnDOT Approved Hydraulic Engineer

STATE OF CONNECTICUT
THOMAS MARSH RYAN
No. 13469
LICENSED
PROFESSIONAL ENGINEER

Close, Jensen and Miller, P.C.

Wethersfield, Connecticut

Issued January 2023

Revised _____

HYDROLOGIC REPORT

BRIDGE NO. 04069

LAKESIDE DRIVE OVER NORTH STAMFORD RESERVOR / RIPPOWAM RIVER

CITY OF STAMFORD

TABLE OF CONTENTS

	Page
Location Map	1
Drainage Area Delineation	2
Introduction	3
Hydrologic Design	
FEMA published flow data	4
2020 Regional Regression Equation flow evaluation	5
Spillway rating curve development	5
Conclusions and Recommendations	6

APPENDICES

Appendix A– FEMA FIS excerpts

Appendix B– Connecticut Regional Regression Equation Analysis (StreamStats)

Appendix C – North Stamford Reservoir Dam
Aquarion correspondence
Spillway Rating Curves
National Inventory of Dams

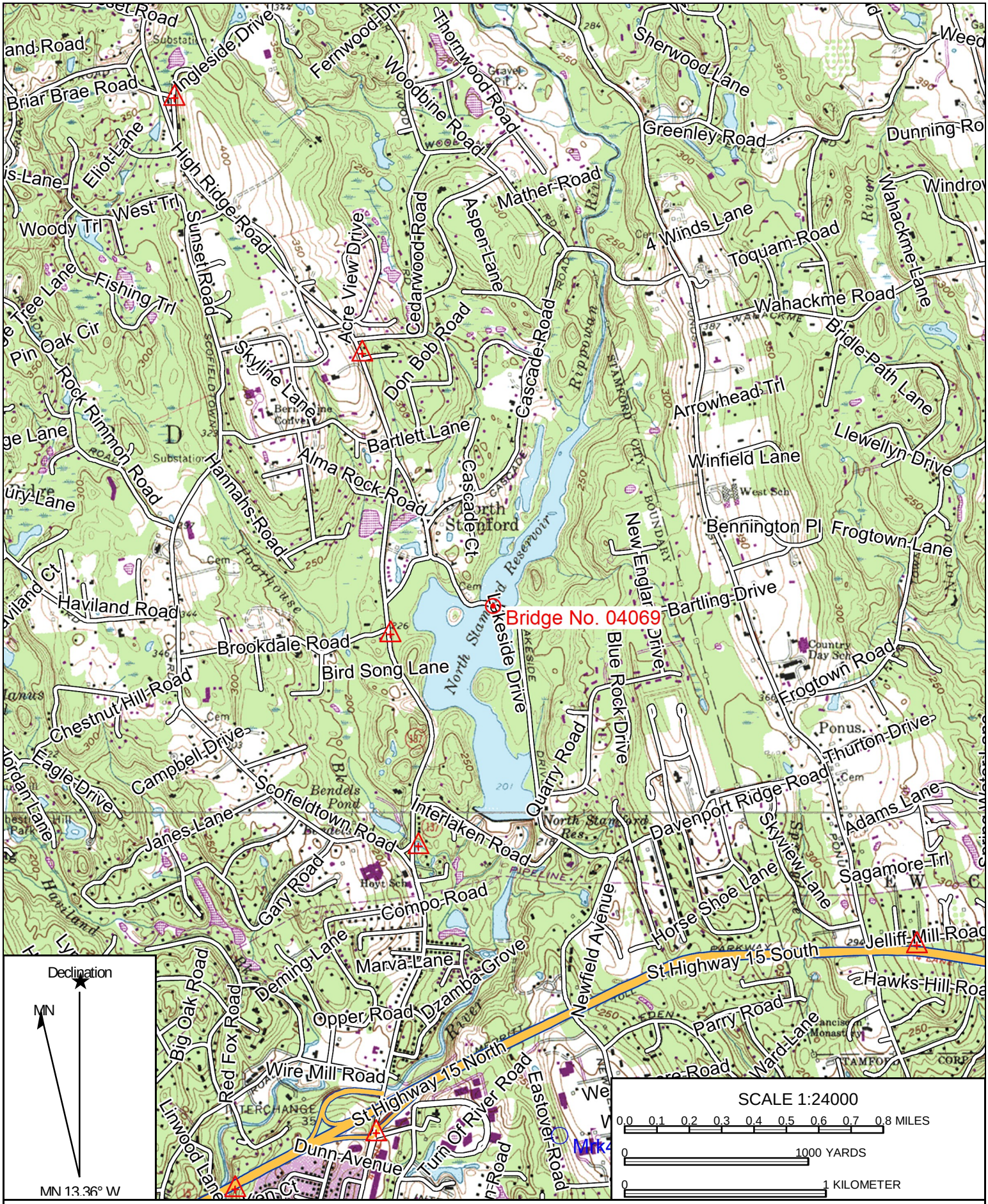

Name: POUND RIDGE
Date: 05/15/18
Scale: 1 inch = 2,000 ft.

Location: 041° 08' 03.93" N, 073° 32' 24.48" W
Lakeside Drive Over North Stamford Reservoir

Copyright (C) 2009 MyTopo

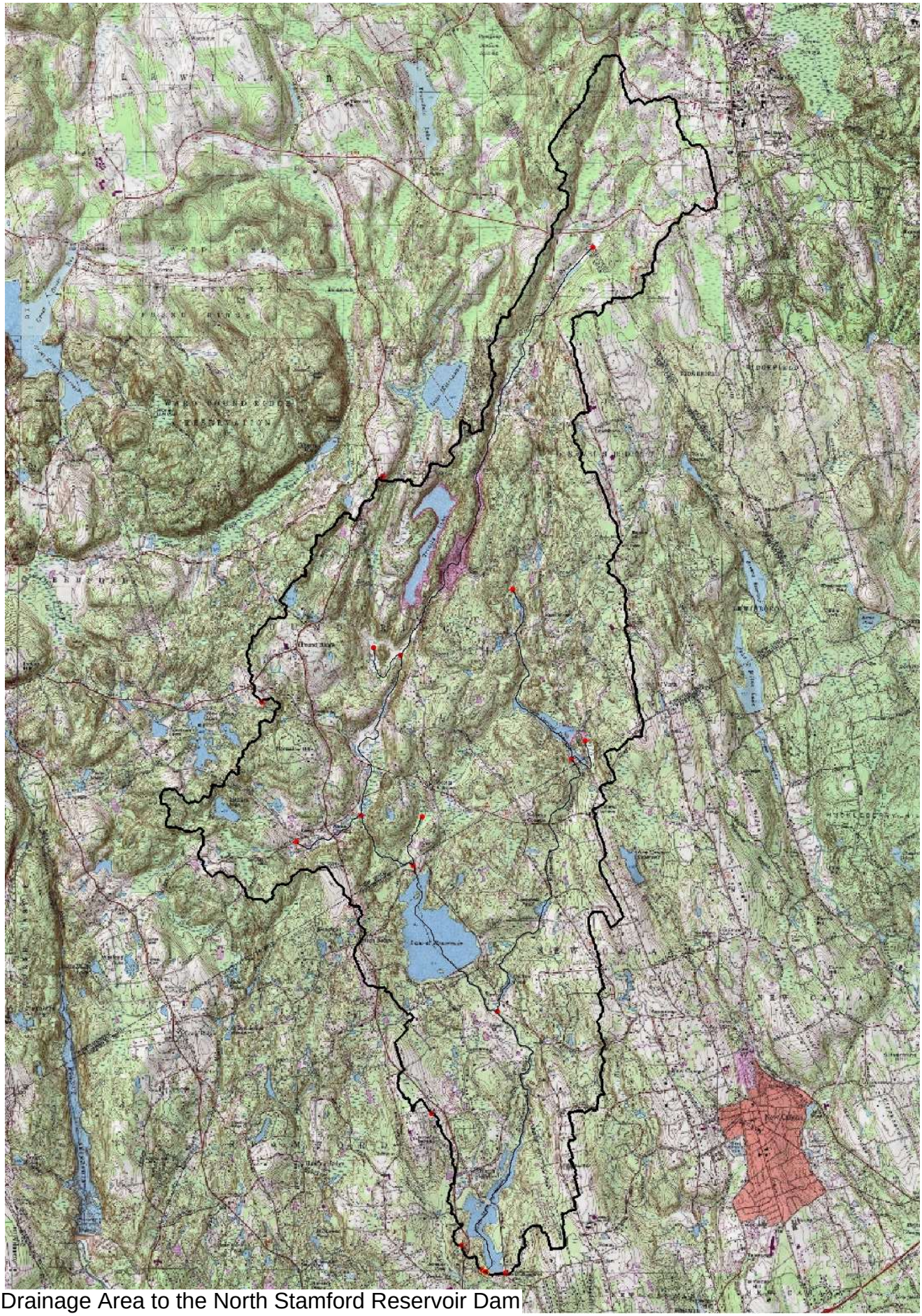

Drainage Area to the North Stamford Reservoir Dam

Introduction

Bridge No. 04069, carrying Lakeside Drive over the North Stamford Reservoir is being replaced as part of the Federal Local Bridge (Design Managed by State) Program. This report is intended to satisfy the detailed Hydrologic Analysis criteria described in ConnDOT's Drainage Manual.

The bridge, originally constructed in 1936 and reconstructed in 1993, is comprised of a reinforced concrete deck and steel beam superstructure, supported on stone masonry abutments and wingwalls. Lakeside Drive is classified as an Urban Local Road, and has a 2019 Average Daily Traffic (ADT) volume of 5430 vehicles. The total structure length and width measure 40 feet and 24.8 feet, respectively. The bridge roadway has a curb-to-curb width of 23.4 feet and an approach width of 18 feet, which each provide two lanes (one lane each direction) of vehicular traffic and no sidewalks are present. The bridge is oriented perpendicular to the North Stamford Reservoir and is on a horizontal tangent section of roadway which transitions to a S-curve section of Lakeside Drive, traveling west across the bridge. Vertically, the bridge is located on the crest of a vertical curve. Metal beam rail and chain link fence, approximately 11 feet tall, is present along both approaches and is continuous over the bridge.

The existing structure has been classified as structurally deficient and functionally obsolete. The structurally deficient designation is due to Superstructure condition rating of 4. Heavy laminated rust with pitting is exhibited on the webs and bottom flanges of the girder ends. The functionally obsolescence designation is due to the Deck Geometry condition rating of 2 and the Approach Roadway Alignment condition rating of 3. The bridge roadway width is substandard for the amount of ADT carried over the structure and the substandard roadway alignment is due to the S-curve located on the west approach.

The project is located in a FEMA-mapped Flood Zone A (approximate); hence, Flood Management Certification approval is required. A Stamford Inland Wetlands Agency permit or approval is required. The project activities qualify as Self Verification under the U.S. Army Corps of Engineers General Permit issued for the State of Connecticut.

At its inception, this project was intended to consist of a superstructure rehabilitation project due to the satisfactory condition of the substructure. Initially, with the rehabilitation recommendation, it was determined that the project would qualify for a Flood Management Certification (FMC) General Permit. For that determination it was shown that the superstructure would not influence the pool elevation of the reservoir based on the spillway elevation determined from LiDAR survey, the correlation of that elevation to the field surveyed pool elevation, and the surveyed elevation of the bridge low chord. That cursory evaluation indicated that there would be ±3.6 feet of underclearance from the normal pool elevation to the superstructure. Additionally, there is no floodway envelope to address.

Subsequent to the structure rehabilitation approval, additional information came to light including the field thickness of the masonry abutment stems; originally thought to be of gravity type, supplemental subsurface exploration revealed that the stems are thin in relation to the

overall abutment height. Further, the footings of the existing structure were found to bear on sand and gravel that may not support the new superstructure design loads. As a result, this project has shifted from a rehabilitation to a full replacement. This design change no longer supports the FMC application of a General Permit. Hydrologic, hydraulic and scour analyses are now required to support the regulatory and design aspects of the project.

In August of 2019, the design team reached out to Aquarion (the dam owner) to request information on the dam and spillway which regulates the pool elevation of the reservoir, and directly influences the hydraulic performance of Bridge 04069. Aquarion will not share the dam as-built plans or hydrologic and hydraulic data as the information is considered confidential as related to drinking water. This is supported by Public Act 17-211, which states that the requested information is indeed confidential and is not subject to disclosure under the Freedom of Information Act. The original as well as further correspondence with Aquarion (11/2022) has afforded the design team with dimensions of the principal spillway, emergency dam and associated embankment dike (weir lengths and elevations), as well as the elevation of the 100-year flood, the ½ Probably Maximum Flood (PMF) and the PMF. No other information is offered without a legally binding Non-Disclosure Agreement.

In order to develop a typical design flow frequency curve for the project, various sources of information are evaluated.

Hydrologic Design

FEMA published flow data

The Rippowam River is studied both upstream (to the corporate boundary of New Canaan and Stamford) and downstream of the North Stamford Reservoir (starting below the dam) for the Fairfield Flood Insurance Study (FIS). The following table presents the published flow data associated with these limits of detailed study from the FIS.

Table 1 – published and transferred flow rates upstream and downstream from North Stamford Reservoir

	Location	Drainage Area (sq.mi.)	10-year (cfs)	50-year (cfs)	100-year (cfs)	500-year (cfs)
From Fairfield FIS	At New Canaan – Stamford corporate limits (upstream from North Stamford Reservoir)	34.85	1760	3170	3910	7060
	Upstream of confluence of Haviland Brook (downstream from North Stamford Reservoir)	24.6	2160	4320	5500	6920
	Flows transferred to the spillway from Upstream of Haviland Brook	21.5	1978	3956	5037	6337

It is first noted that the drainage area documented for the corporate boundary between New Canaan and Stamford must be a typo in the FIS. As delineated with StreamStats (version 4.11.1), the drainage area to the New Canaan-Stamford limits is 20.1 square miles. Further, also delineated with StreamStats, the drainage area to the spillway of the North Stamford Reservoir is 21.5 square miles. Using the gage data transfer equation from the CTDOT Drainage Manual, those flows for the Rippowam are transferred from the 24.6 square mile watershed upstream from Haviland Brook to the spillway of the reservoir. Based solely on the published information, these transferred flows would be the recommended flows at the outlet of the reservoir.

2020 Regional Regression Equation flow evaluation

A flow frequency curve is estimated based on the 2020 Regional Regression Equations (RRE) published for Connecticut, processed using the StreamStats online water resources evaluation application. As indicated previously, the contributing basin to the spillway of the North Stamford Reservoir is 21.5 square miles. The calculated design flow rates from the 2020 regression equations are:

Table 2 – 2020 RRE results at the spillway of the North Stamford Reservoir (as calculated with StreamStats

Drainage Area (sq. mi.)	2-year (cfs)	10-year (cfs)	25-year (cfs)	50-year (cfs)	100-year (cfs)	500-year (cfs)
21.5	698	1490	1990	2430	2910	3940

Spillway rating curve development

While Aquarion will not release the dam as-built plans or design parameters or hydrologic and hydraulic data, enough information was released to estimate a spillway performance curve based on the hydraulic head over the weir. The North Stamford Reservoir Dam has three main components – a principal spillway, a dam/emergency spillway, and a dike. The principal spillway is further separated into a broad crested concrete weir and an ogee type crested weir. Aquarion has provided both the lengths and the elevations of each of these components.

Figure 1 – Aerial view of North Stamford Reservoir

Table 3 – Dam components length and elevation released by Aquarion

Dam Component	Length (ft)	Crest Elevation	
		Feet NGVD '29	Feet NAVD '88[1]
Ogee Crest Spillway	130	199.8	198.7
Concrete Broad Crest Spillway	150	199.8	198.7
Concrete Dam (emergency spillway)	380	203.9	202.8
Earthen Dike	410	206.0	204.9

In addition to the above information, Aquarion has also provided some design event elevations at the spillway. The 100-year event is 201.3 feet, the ½ PMF is 205.9 feet and the PMF is 208.7 feet, all referencing NAVD '88. From this data it can be assumed that the crest of the principal and emergency spillways are designed such that the 100-year event would be fully managed by the principal spillway with a 1.5-foot freeboard to the emergency spillway. Verification of these flood elevations is not possible as the flows assigned to each event were not provided, nor were design weir coefficients for each dam component, however, a spillway rating curve can still be developed with some assumptions.

Commonly accepted weir flow coefficients in imperial units for broad crested weirs is between 2.6 and 3.1, and for ogee crested weirs is between 3.2 and 4.1 (with the ideal weir coefficient at the design head being 3.9). Assuming an ogee crest weir coefficient is difficult without knowing what the design head is. Additionally, ogee weirs increase their conveyance efficiency as the height of the water column behind increases. For this principal spillway evaluation, an efficient broad crested weir coefficient is selected at 3.1 and for the ogee type weir, the lesser efficient coefficient is selected at 3.2. As each component of the principal

[1] From CORPSCON v. 6.0.1: NAVD '88 = NGVD '29-1.06 at 41-07-30N, 73-32-26W

spillway are more or less equal in length, the selection of weir coefficients is reasonable and would approximate an average of the overall weir efficiency.

The spillway rating curve is based on the standard weir equation,

$$Q = CLH^{\frac{3}{2}}$$

and applied to the two segments of the principal spillway. To develop the total discharge based on head over the crest of the weir, each segment result is simply added. Computations start with a head of 0.0 feet, corresponding to the elevation of the principal spillway and continue to a head of 4.1 feet, which would be the elevation that the emergency spillway would become active. Based on the information provided by Aquarion, the 100-year design event for the spillway would occur with a head of 2.6, corresponding to 201.3 feet. The following chart presents the two spillway segments performance curve along with a composite for the total spillway. The calculated 100-year flow rate and the incipient pressure flow rate for the bridge are also shown.

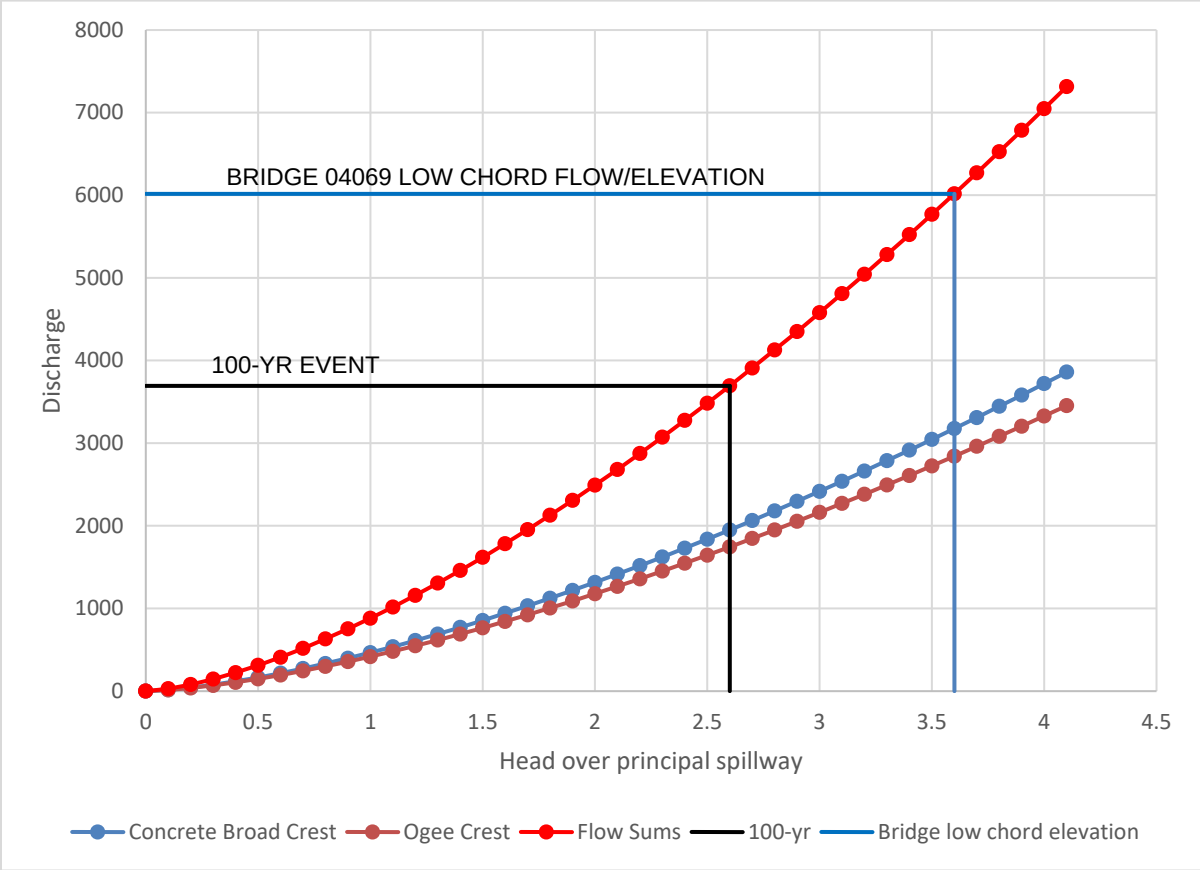

Figure 2 – Calculated performance curves for each segment to the principal spillway and the total performance rating curve

From the calculated performance curve based on information provided by Aquarion, the 100-year event has a flow rate of 3693-cfs.

Conclusions and Recommendations
Comparison of calculated 100-year flow rates and recommendation of flows.

The previous sections present methods of predicting the deign 100-year flow rate over the spillway of the North Stamford Reservoir Dam. Methods include published FEMA flow evaluation, regional regression equations results and development of a performance curve based on information released by the dam owner.

Table 4 – summary of 100-year flow evaluation

	FEMA flow evaluation	2020 Regional Regression Equation Results	Performance curve of spillway
100-year flow (cfs)	5037	2910	3693

These results present remarkably different flow estimates for the 100-year event based on various available information. Typically for a conventional hydrologic assessment for a bridge replacement project, the 2020 RRE are selected for design due to the reliability of the equations in comparison to observations from stream gages in the lower New England area. In this case, however, the influence of the dam downstream does impact the flow elevations at the project site and should be given greater consideration in design of the proposed crossing. While the design hydrology for the dam, or the design hydraulic parameters are not given, the design 100-year height over the spillway is given, to which a flow rate can be estimated.

In developing a flow frequency curve to be used for the project hydraulic design, it is proposed to use the slope of the flow frequency curve developed through application of the 2020 RRE's and adjust the intercept value to calibrate the curve to the 100-year flow rate calculated by the weir flow design head given by Aquarion.

Table 5 – RRE frequency/flows and frequency/flows adjusted for target 100-year discharge (recommended discharges for the dam spillway are in bold)

Event (yr)	Regional Regression Equation flow estimates (cfs)	RRE estimates adjusted to target 100-year flow (cfs)
2	698	**900**
10	1490	**1960**
25	1990	**2440**
50	2430	**3130**
100	2910	**3690**
200	3270	**4295**
500	3940	**5160**

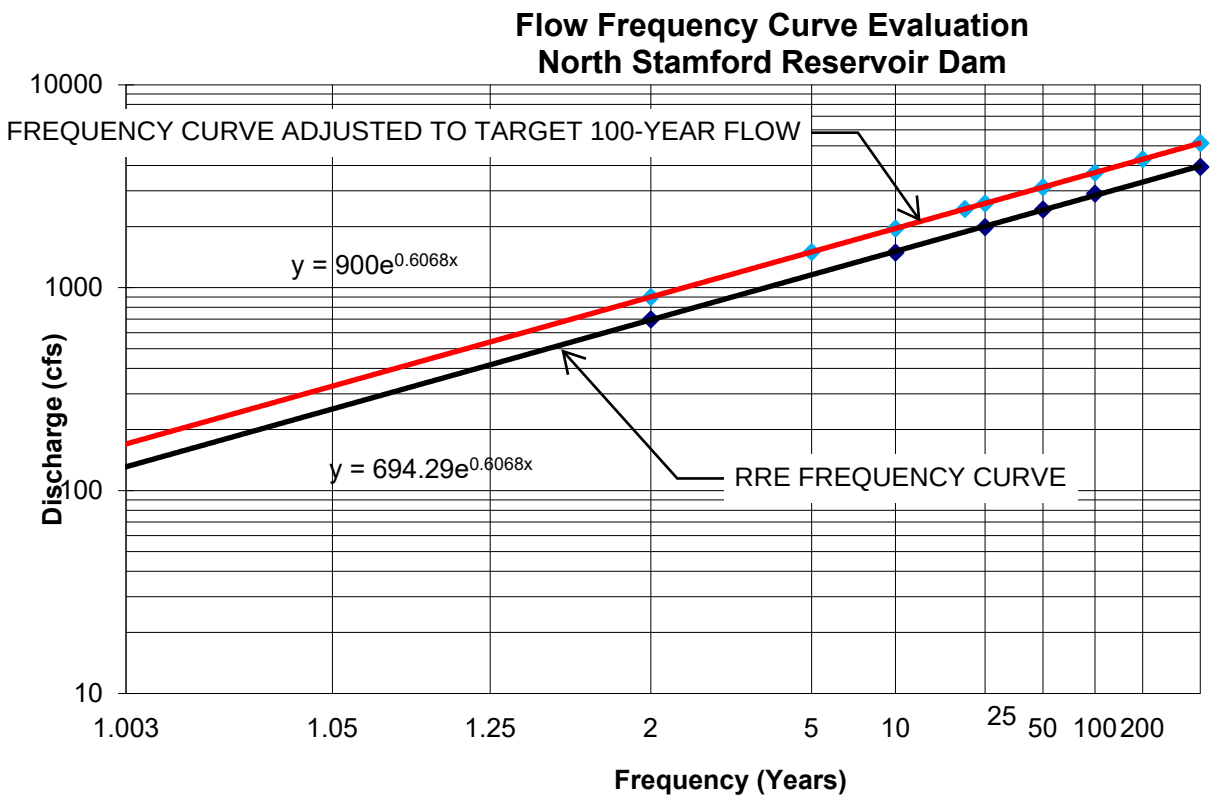

Figure 3 – Flow frequency curves from RRE and adjusted for target 100-year discharge

From the graph above and the exponential trend line equation on the log transformed plot area, it can be seen that the slope of the trend lines is the same, indicating the same distribution of flows to frequencies. The difference is in the intercept; the adjusted frequency curve is moved along the y-axis to a target 100-year event of 3690-cfs.

The developed spillway performance curve falls in line with data documented with the National Inventory of Dams, which presents that the maximum discharge for the spillway is 7350-cfs. Reviewing the spillway rating curve developed in this analysis shows that the maximum head of 4.1 feet over the principal spillway (just prior to the emergency spillway becoming active) is 7314-cfs. Further, based on the findings herein, the standard hydraulic check event of 5160-cfs for this bridge design (500-year) would be maintained by the principal spillway. As this is a high hazard (Class C) dam, it is reasonable to assume that the overall dam is designed for either the ½ PMF or the full PMF, which would be greater than the 500-year event. The definition of the 500-year event also presents that this bridge (in its existing condition) would provide for free surface (non-pressure) flow conditions, as the low chord is greater in elevation than the predicted 500-year head over the spillway.

Appendices

Appendix A – FEMA FIS Excerpts

Appendix B – Connecticut Regional Regression Equation Analysis (StreamStats)

Appendix C – North Stamford Reservoir Dam
Aquarion correspondence
Spillway Rating Curves
National Inventory of Dams

Appendix A – FEMA FIS Excerpts

FLOOD INSURANCE STUDY

VOLUME 1 OF 6

FAIRFIELD COUNTY, CONNECTICUT
(ALL JURISDICTIONS)

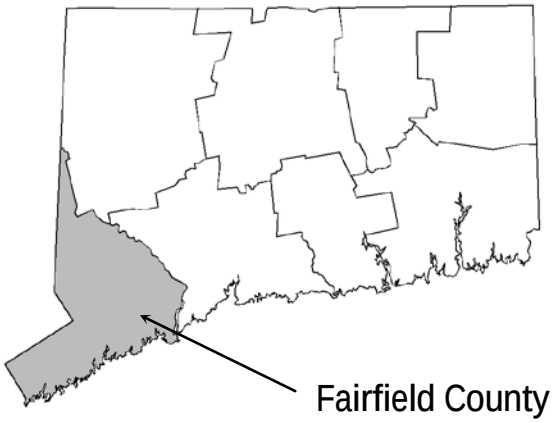

COMMUNITY NAME	COMMUNITY NUMBER
BETHEL, TOWN OF	090001
BRIDGEPORT, CITY OF	090002
BROOKFIELD, TOWN OF	090003
DANBURY, CITY OF	090004
DARIEN, TOWN OF	090005
EASTON, TOWN OF	090006
FAIRFIELD, TOWN OF	090007
GREENWICH, TOWN OF	090008
MONROE, TOWN OF	090009
NEW CANAAN, TOWN OF	090010
NEW FAIRFIELD, TOWN OF	090188
NEWTOWN, TOWN OF	090011
NORWALK, CITY OF	090012
REDDING, TOWN OF	090141
RIDGEFIELD, TOWN OF	090013
SHELTON, CITY OF	090014
SHERMAN, TOWN OF	090166
STAMFORD, CITY OF	090015
STRATFORD, TOWN OF	090016
TRUMBULL, TOWN OF	090017
WESTON, TOWN OF	090018
WESTPORT, TOWN OF	090019
WILTON, TOWN OF	090020

Revised:
October 16, 2013

Federal Emergency Management Agency

FLOOD INSURANCE STUDY NUMBER
09001CV001C

watershed runoff hydrographs. Level pool storage routing was used to route the inflow hydrographs through the lakes and ponds.

The regression equations used in the analysis are published in Connecticut Water Resources Bulletin No. 36 from the USGS (Reference 75). A regression equation was not available for the 0.2-percent-annual-chance floods; therefore, the flood peaks were extrapolated from the 50- to 1-percent-annual-chance data. The rainfall values used in the regression equations were obtained from "Aerial Rainfall Maps for Connecticut" included in a paper entitled “Flood Flow Formulas for Urbanized and Nonurbanized Areas of Connecticut”, by the USGS (Reference 69).

Data on the stream lengths and channel slopes were obtained from USGS topographic maps (Reference 73). The percent stratified drift within the watersheds was obtained from "Water Resources Inventory of Connecticut, Part 6, Upper Housatonic River Basin," prepared by the USGS in cooperation with the Connecticut Water Resources Commission (Reference 76).

The HEC-1 model produced peak discharges of higher magnitude than the regression equations. The computed peak discharges were presented to the FEMA Region I project officer for his review and comment. The project officer selected the peak discharges computed with the regression equations.

In the City of Shelton, for the streams studied by detailed methods in the original FIS, with the exception of the Housatonic River (Lower Reach), the NRCS synthetic rainfall-runoff method was used to obtain the 10-, 2-, 1-, and 0.2-percent-annual-chance peak discharges (Reference 77). This method uses (a) soils and land use information to develop the runoff curve numbers that relate the rainfall to runoff (allowing for initial abstraction losses), (b) topography and stream hydraulics from which times of concentration are calculated, and (c) rainfall and the distribution of rainfall taken from the Weather Bureau (Reference 42 & 56).

The USGS stream gage at Stevenson Dam (No. 0120550), located approximately 5,000 feet above the northern corporate limits of Shelton, was analyzed by the USACE for discharges on the Housatonic River (Lower Reach) in the original FIS. The gage has been in operation since August 1928. The log-Pearson Type III procedure was used with a discharge of 125,000 cfs from the August 1955 storm. At the time of the August 1955 storm, there was an abnormal amount of storage available in the watershed, so the measured discharge was not used.

In the 1991 revision, the hydrologic analyses for the Housatonic River (Lower Reach) used in the original FIS were reviewed and used.

In the City of Stamford’s original study, the hydrologic analyses were based on a log-Pearson Type III statistical analysis of peak-flow data for five long-term USGS gaging stations and used a regional skew of 0.7. The five gaging stations and the periods of record from that report are listed below:

Location	Period of Record
Saugatuck River (Lower Reach) near Westport, Connecticut	1932-1960
Quinnipac River at Wallingford, Connecticut	1932-1980
Pomperang River at Southbury, Connecticut	1932-1980
Blind Brook at Rye, New York	1943-1980
Pequabuck River at Forestville, Connecticut	1941-1980

Average parameters were developed for the streams, and these parameters were applied to the study streams. The computed flows were adjusted based on a discharge-drainage area relationship.

Within Stamford, several water-supply reservoirs have been developed. For the purpose of the original study, the reservoirs were assumed to be full, therefore, to have a negligible effect on reducing flood peaks.

Also in the original study, tidal flood stage frequencies were developed from an analysis of tidal data collected at the Stamford hurricane barrier tidal gage and from additional information (Reference 33). The Stamford gage has been operated since 1968 by the National Oceanic and Atmospheric Administration (NOAA).

In the November 17, 1993, revision, hydrologic analyses were performed by the USACE to establish the peak discharge-frequency relationships for floods of the selected recurrence intervals for each stream record from six USGS gaging stations in the region using a log-Pearson Type III distribution (Reference 60).

The adopted discharge frequencies for the Rippowam River (Upper Reach) and Rippowam River (Lower Reach) and its tributaries, Toilsome, Haviland, and Poorhouse Brooks, were based on a mean per square mile of 1.99, a standard deviation of 0.290, and an adopted skew of 0.5, which agreed closely with the data developed in a recent USACE flood control study for the basin.

Similarly, on the main stem of the Noroton River, the statistically developed flows were within specified limits of the flow values used in an earlier FIS; therefore, the higher earlier flow values were adopted. The developed statistical parameters were used in computing the adopted flows for Springdale Brook.

PWG received from the USACE a study prepared by Leonard Jackson Associates. This study had higher flow values than those developed by the USACE. These greater flows were used by PWG for the restudy of the East Branch Mianus River and the Noroton River. The USACE agreed to the larger flows on these two streams.

In the Town of Stratford, the NRCS booklet, “A Method of Estimating Volume and Rate of Runoff in Small Watersheds,” was used to determine the flood frequency-discharge values for Bruce Brook, Tanners Brook, and Pumpkin Ground Brook (Reference 46). For the streams studied by detailed methods, storms of the selected recurrence intervals were computed. The 0.2-percent-annual-chance rainfall intensity was determined by the extrapolation of a curve fit to the 10-, 2- and 1-percent-annual-chance rainfall intensities probability graph. In the second revision, flood frequency-discharge values for Long Brook

TABLE 5 - SUMMARY OF DISCHARGES - continued

FLOODING SOURCE AND LOCATION	DRAINAGE AREA (sq. miles)	PEAK DISCHARGES (cfs) 10-PERCENT-ANNUAL-CHANCE	2-PERCENT-ANNUAL-CHANCE	1-PERCENT-ANNUAL-CHANCE	0.2-PERCENT-ANNUAL-CHANCE
POPLAR PLAINS BROOK					
At confluence with Saugatuck River (Lower Reach)	0.94	145	195	245	480
PUMPKIN GROUND BROOK					
At confluence with Long Brook	6.12	1,165	1,640	1,895	2,875
At Beaver Dam Lake	1.15	935	1,330	1,550	2,290
PUTNAM PARK BROOK					
Upstream of confluence of Wolf Pit Brook	0.93	130	175	220	320
RIDGEFIELD BROOK					
At State Route 35	2.60	125	185	235	410
RIPPOWAM RIVER (LOWER REACH)					
At the mouth	37.5	2,900	5,800	7,400	9,300
At the Stillwater Pond	33.4	2,670	5,350	6,820	8,580
Downstream of confluence of Haviland Brook	28.7	2,400	4,800	6,140	7,710
Upstream of confluence of Haviland Brook	24.6	2,160	4,320	5,500	6,920
RIPPOWAM RIVER (UPPER REACH)					
At New Canaan-Stamford corporate limits	34.85	1,760	3,170	3,910	7,060
Upstream of confluence of Laurel Brook	5.15	720	1,240	1,550	2,700
Upstream of Lockwood Pond	4.33	610	1,040	1,300	2,270
At Siscowit Reservoir	3.46	480	830	1,040	1,810

Location of FIS published flow rates for Rippowam River in relation to the North Stamford Reservoir Dam

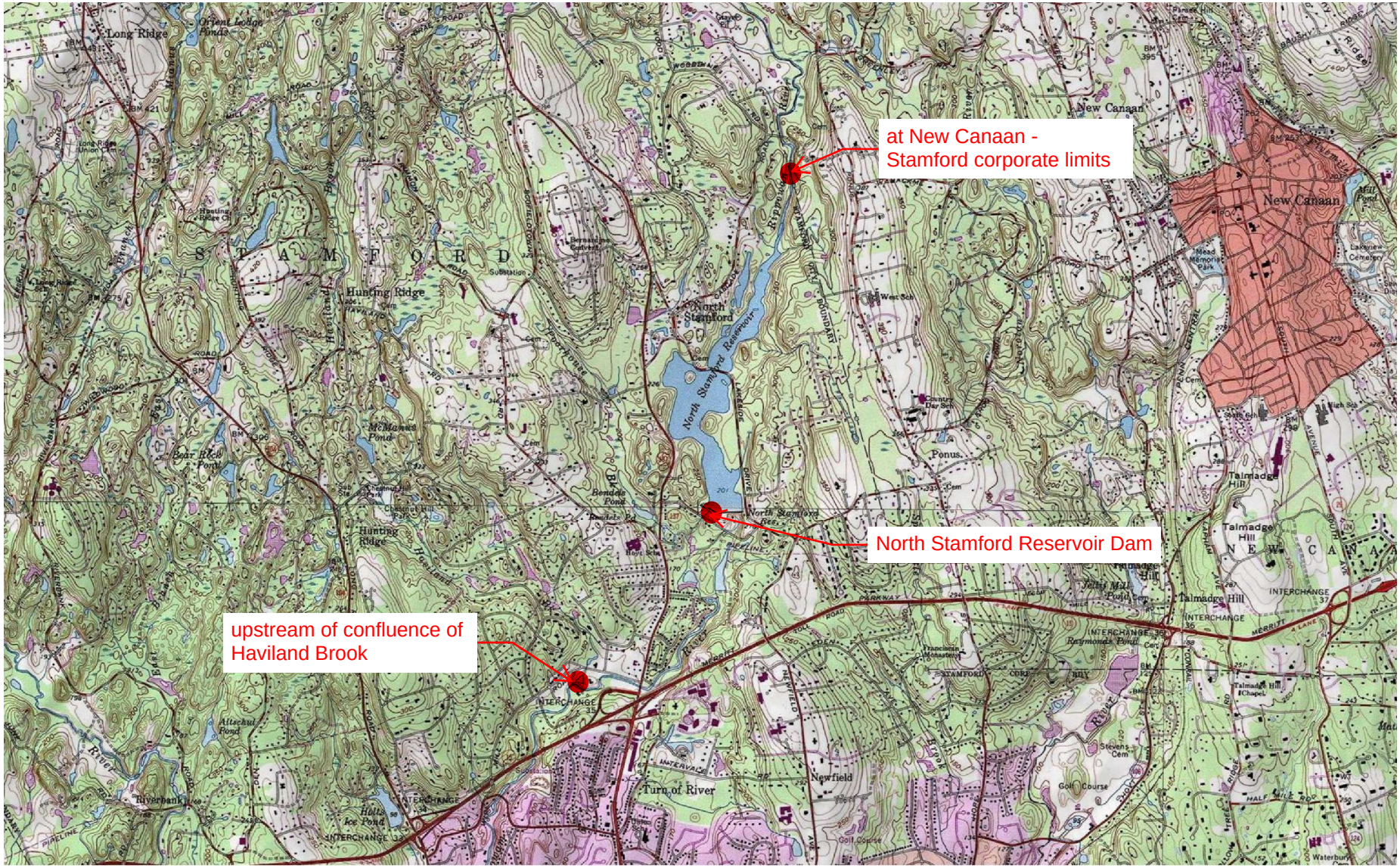

Lakeside Drive over North Stamford Reservoir
Bridge 04069

A_1 = AREA OF WATERSHED TO PRORATE DA ratio 87.40%
A_2 = AREA OF GAGED WATERSHED **MUST BE 125% > area > 75%**

A_1 =	**21.5**	**SQUARE MILES**	at spillway
A_2=	**24.6**	**SQUARE MILES**	US of Haviland

$$K = \frac{A_1^{((0.894/A_1^{0.048})-1)}}{A_2^{((0.894/A_2^{0.048})-1)}}$$

K= 1.0478

DISCHARGE FREQUENCY	GAGE DATA (CFS)	CSM	X	K	X	A_1	Q_1 (CFS)
Q_2		0	X	1.0478	X	21.5	0
Q_{10}	2160	88	X	1.0478	X	21.5	1978
Q_{25}		0	X	1.0478	X	21.5	0
Q_{50}	4320	176	X	1.0478	X	21.5	3956
Q_{100}	5500	224	X	1.0478	X	21.5	5037
Q_{500}	6920	281	X	1.0478	X	21.5	6337

Appendix B – Connecticut Regional Regression Equation Analysis (StreamStats)

StreamStats Report To Spillway

Region ID: CT
Workspace ID: CT20221130163402301000
Clicked Point (Latitude, Longitude): 41.12484, -73.54018
Time: 2022-11-30 11:34:23 -0500

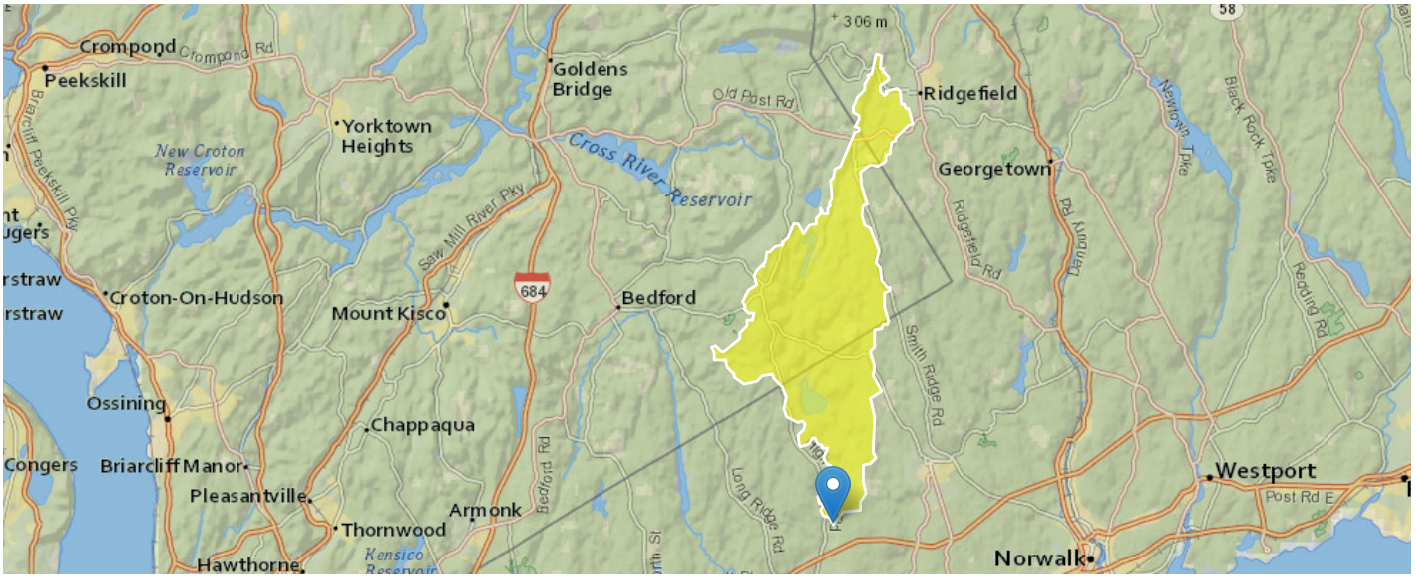

Collapse All

Basin Characteristics

Parameter Code	Parameter Description	Value	Unit
CAT1ROADS	Length of interstates lmtd access highways and ramps for lmtd access highways, includes cloverleaf interchanges (USGS Ntl Transp Dataset)	0	miles
CAT2ROADS	Length of sec hwy or maj connecting roads; main arteries & hwys not lmtd access, usually in the US Hwy or State Hwy systems (USGS Ntl Transp Dataset)	0	miles
CAT3ROADS	Length of local connecting roads; roads that collect traffic from local roads & connect towns, subdivisions & neighborhoods (USGS Nat Transp Dataset)	24.8	miles
CAT4ROADS	Length of local roads; generally paved street, road, or byway that usually have single lane of traffic in each direction (USGS Ntnl Transp Dataset)	154	miles
CROSCOUNT1	Number of intersections between streams and roads, where the roads are interstate, limited access highway, or ramp (CAT1ROADS)	0	dimensionless
CROSCOUNT2	Number of intersections between streams and roads, where the roads are secondary highway or major connecting road (CAT2ROADS)	0	dimensionless
CROSCOUNT3	Number of intersections between streams and roads, where roads are local conecting roads (CAT3ROADS)	31	dimensionless
CROSCOUNT4	Number of intersections between streams and roads, where roads are local roads (CAT4ROADS)	236	dimensionless
CRSDFT	Percentage of area of coarse-grained stratified drift	4.01	percent
CSL10_85	Change in elevation divided by length between points 10 and 85 percent of distance along main channel to basin divide - main channel method not known	32.6	feet per mi
DRNAREA	Area that drains to a point on a stream	21.5	square miles
ELEV	Mean Basin Elevation	496	feet
I24H100Y	Maximum 24-hour precipitation that occurs on average once in 100 years	8.42	inches

Parameter Code	Parameter Description	Value	Unit
I24H10Y	Maximum 24-hour precipitation that occurs on average once in 10 years	5.41	inches
I24H200Y	Maximum 24-hour precipitation that occurs on average once in 200 years	9.65	inches
I24H25Y	Maximum 24-hour precipitation that occurs on average once in 25 years	6.61	inches
I24H2Y	Maximum 24-hour precipitation that occurs on average once in 2 years - Equivalent to precipitation intensity index	3.3	inches
I24H500Y	Maximum 24-hour precipitation that occurs on average once in 500 years	11.26	inches
I24H50Y	Maximum 24-hour precipitation that occurs on average once in 50 years	7.52	inches
I24H5Y	Maximum 24-hour precipitation that occurs on average once in 5 years	4.5	inches
LC11DEV	Percentage of developed (urban) land from NLCD 2011 classes 21-24	16.4	percent
LC11IMP	Average percentage of impervious area determined from NLCD 2011 impervious dataset	2.26	percent
LFPLENGTH	Length of longest flow path	15.1	miles
MAPM	Mean Annual Precip Basin Average	50.862	inches
NOVAVPRE	Mean November Precipitation	4.5	inches
PRCWINTER	Mean annual precipitation for December through February	3.9	inches
SGSL	Total stream length intersecting sand and gravel deposits (in miles)	4.37	miles
SOILPERM	Average Soil Permeability	3.067	inches per hour
SSURGOCCDD	Percentage of area with hydrologic soil types C, D, or C/D from SSURGO	0.2424	percent
STRMTOT	total length of all mapped streams (1:24,000-scale) in the basin	80.7	miles
WETLAND	Percentage of Wetlands	0.7	percent

Peak-Flow Statistics

Peak-Flow Statistics Parameters [100.0 Percent (21.5 square miles) Statewide DA only SIR 2020 5054]

Parameter Code	Parameter Name	Value	Units	Min Limit	Max Limit
DRNAREA	Drainage Area	21.5	square miles	0.69	325

Peak-Flow Statistics Parameters [100.0 Percent (21.5 square miles) Statewide Multiparameter SIR 2020 5054]

Parameter Code	Parameter Name	Value	Units	Min Limit	Max Limit
DRNAREA	Drainage Area	21.5	square miles	0.69	325
I24H2Y	24 Hour 2 Year Precipitation	3.3	inches	2.77	3.32
SSURGOCCDD	Percent soil type C or D from SSURGO	0.2424	percent	0.118	0.945
I24H5Y	24 Hour 5 Year Precipitation	4.5	inches	4	4.7
I24H10Y	24 Hour 10 Year Precipitation	5.41	inches	4.86	5.79
I24H25Y	24 Hour 25 Year Precipitation	6.61	inches	5.99	7.22
I24H50Y	24 Hour 50 Year Precipitation	7.52	inches	6.81	8.3
I24H100Y	24 Hour 100 Year Precipitation	8.42	inches	7.62	9.38
I24H200Y	24 Hour 200 YearPrecipitation	9.65	inches	8.7	11.22
I24H500Y	24 Hour 500 Year Precipitation	11.26	inches	10.1	13.64

Peak-Flow Statistics Flow Report [100.0 Percent (21.5 square miles) Statewide DA only SIR 2020 5054]

PII: Prediction Interval-Lower, PIu: Prediction Interval-Upper, ASEp: Average Standard Error of Prediction, SE: Standard Error (other -- see report)

Statistic	Value	Unit	ASEp
Drainage Area Only 50-percent AEP flood	698	ft^3/s	35
Drainage Area Only 20-percent AEP flood	1190	ft^3/s	35
Drainage Area Only 10-percent AEP flood	1600	ft^3/s	36.3
Drainage Area Only 4-percent AEP flood	2220	ft^3/s	37.8
Drainage Area Only 2-percent AEP flood	2740	ft^3/s	39.8
Drainage Area Only 1-percent AEP flood	3340	ft^3/s	42.4
Drainage Area Only 0.5-percent AEP flood	4010	ft^3/s	44.4
Drainage Area Only 0.2-percent AEP flood	5020	ft^3/s	48

Peak-Flow Statistics Flow Report [100.0 Percent (21.5 square miles) Statewide Multiparameter SIR 2020 5054]

PII: Prediction Interval-Lower, PIu: Prediction Interval-Upper, ASEp: Average Standard Error of Prediction, SE: Standard Error (other -- see report)

Statistic	Value	Unit	PII	PIu	ASEp
50-percent AEP flood	698	ft^3/s	170	2860	26.5
20-percent AEP flood	1170	ft^3/s	258	5300	26.3
10-percent AEP flood	1490	ft^3/s	303	7320	28.4
4-percent AEP flood	1990	ft^3/s	365	10800	31.5
2-percent AEP flood	2430	ft^3/s	407	14500	34.3
1-percent AEP flood	2910	ft^3/s	443	19100	37.1
0.5-percent AEP flood	3270	ft^3/s	559	19100	40.6
0.2-percent AEP flood	3940	ft^3/s	718	21600	45

Peak-Flow Statistics Flow Report [Area-Averaged]

PII: Prediction Interval-Lower, PIu: Prediction Interval-Upper, ASEp: Average Standard Error of Prediction, SE: Standard Error (other -- see report)

Statistic	Value	Unit	ASEp		
Drainage Area Only 50-percent AEP flood	698	ft^3/s	35		
Drainage Area Only 20-percent AEP flood	1190	ft^3/s	35		
Drainage Area Only 10-percent AEP flood	1600	ft^3/s	36.3		
Drainage Area Only 4-percent AEP flood	2220	ft^3/s	37.8		
Drainage Area Only 2-percent AEP flood	2740	ft^3/s	39.8		
Drainage Area Only 1-percent AEP flood	3340	ft^3/s	42.4		
Drainage Area Only 0.5-percent AEP flood	4010	ft^3/s	44.4		
Drainage Area Only 0.2-percent AEP flood	5020	ft^3/s	48		
50-percent AEP flood	698	ft^3/s	170	2860	26.5
20-percent AEP flood	1170	ft^3/s	258	5300	26.3
10-percent AEP flood	1490	ft^3/s	303	7320	28.4
4-percent AEP flood	1990	ft^3/s	365	10800	31.5
2-percent AEP flood	2430	ft^3/s	407	14500	34.3
1-percent AEP flood	2910	ft^3/s	443	19100	37.1
0.5-percent AEP flood	3270	ft^3/s	559	19100	40.6
0.2-percent AEP flood	3940	ft^3/s	718	21600	45

Peak-Flow Statistics Citations

Ahearn, E.A., and Hodgkins, G.A.,2020, Estimating flood magnitude and frequency on streams and rivers in Connecticut, based on data through water year 2015: U.S. Geological Survey Scientific Investigations Report 2020–5054, 42 p. (https://doi.org/10.3133/sir20205054)

USGS Data Disclaimer: Unless otherwise stated, all data, metadata and related materials are considered to satisfy the quality standards relative to the purpose for which the data were collected. Although these data and associated metadata have been reviewed for accuracy and completeness and approved for release by the U.S. Geological Survey (USGS), no warranty expressed or implied is made regarding the display or utility of the data for other purposes, nor on all computer systems, nor shall the act of distribution constitute any such warranty.

USGS Software Disclaimer: This software has been approved for release by the U.S. Geological Survey (USGS). Although the software has been subjected to rigorous review, the USGS reserves the right to update the software as needed pursuant to further analysis and review. No warranty, expressed or implied, is made by the USGS or the U.S. Government as to the functionality of the software and related material nor shall the fact of release constitute any such warranty. Furthermore, the software is released on condition that neither the USGS nor the U.S. Government shall be held liable for any damages resulting from its authorized or unauthorized use.

USGS Product Names Disclaimer: Any use of trade, firm, or product names is for descriptive purposes only and does not imply endorsement by the U.S. Government.

Application Version: 4.11.1
StreamStats Services Version: 1.2.22
NSS Services Version: 2.2.1

Appendix C – North Stamford Reservoir Dam
Aquarion correspondence
Spillway Rating Curves
National Inventory of Dams

Eric Buckley

From: Eric Buckley <EBuckley@cjmpc.com>
Sent: Thursday, August 29, 2019 8:43 AM
To: 'Hetal Shah'
Subject: RE: North Stamford Reservoir Dam - #13501

Great, thanks.

From: Hetal Shah [mailto:HShah@aquarionwater.com]
Sent: Thursday, August 29, 2019 8:32 AM
To: Eric Buckley
Cc: Tom Ryan
Subject: RE: North Stamford Reservoir Dam - #13501

Here is the information regarding the dam/spillway. Let me get the H&H report and I will get back to you with the information in next couple of days.

DEP/ COE Reg. No.	DAM Name and Location	Year Built	COE Size Class.	Hazard Classification	Dam Information				Spillway Information			Inlet/Outlet Structures	Tributary River	Storage Capacity Million Gallons
					Type	Height (Ft.)	Length (Ft.)	Freeboard (Ft.)	Type	Height (Ft.)	Length (Ft.)			
13501 CT00048	N. Stamford Reservoir Dam N. Stamford, CT	1908 ReConst. 1995 Rehabilitation 2011	Intermediate	High "C"	Concrete Earth Dike	42 24	380 410	4	Conc. Ogee Exp.	23	150 130	1-36" C.I.	Rippowam River	671.35

Thanks,
Hetal

From: Eric Buckley [mailto:EBuckley@cjmpc.com]
Sent: Thursday, August 29, 2019 8:26 AM
To: Hetal Shah
Cc: Mike Liberante; Mike Claps; Carolyn Giampe; Tom Ryan
Subject: RE: North Stamford Reservoir Dam - #13501

Aquarion IT Notice - EXTERNAL EMAIL: Do not reply, click on links or open attachments unless you trust the sender AND know the content is safe. Report suspicious emails by forwarding to the IT help desk

---

Understood.
Attached is an aerial of the area pointing out the location of the bridge.
I don't need that much of in depth information, for the tailwater analysis of the bridge, I just need dam/spillway geometry (length, width, elevation) to come up with a rating curve, and I was hoping to see how the hydrologic design of the dam compares to my watershed analysis.
Releases probably will help as well, but being a water supply reservoir, for bridge design purposes I would assume a spillway elevation to start and add storage from there.

Eric

From: Hetal Shah [mailto:HShah@aquarionwater.com]
Sent: Thursday, August 29, 2019 8:14 AM
To: Eric Buckley
Cc: Mike Liberante; Mike Claps; Carolyn Giampe
Subject: RE: North Stamford Reservoir Dam - #13501

HI Eric –

You got the correct contact information.

Aquarion do not share the dam as-built plans, operations or H&H as being confidential information related to drinking water. However, we would be happy to help you with the information that you need related to our releases that may affect the rehab/replacement work.

For starters, can you please send me a goggle map showing the exact location of the bridge?

Thanks,
Hetal Shah
Senior Engineer
Engineering and Planning
Aquarion Water Company
600 Lindley Street
Bridgeport, CT 06606

(203) 337-5822 (tel)
(203) 526-4398 (mobile)
(203) 337-5839 (fax)
hshah@aquarionwater.com (email)

Stewards of the Environment

From: Eric Buckley [mailto:EBuckley@cjmpc.com]
Sent: Thursday, August 29, 2019 8:07 AM
To: Hetal Shah
Subject: North Stamford Reservior Dam - #13501

Aquarion IT Notice - EXTERNAL EMAIL: Do not reply, click on links or open attachments unless you trust the sender AND know the content is safe. Report suspicious emails by forwarding to the IT help desk

Mrs. Shah,
I found your contact information on Aquarion's website. I am a design engineer with Close, Jensen and Miller working as a liaison to the Department of Transportation. We have a project coming up that includes the rehabilitation/replacement of the Lakeside Drive Bridge (#04069) over the North Stamford Reservoir.
I was hoping that you could help me out with information on your reservoir dam; as built plans, operations, hydrologic/hydraulic design computations… as this dam controls the flows for the bridge. Anything you could offer would be helpful.
Thanks in advance!

Eric W Buckley
Water Resources / Environmental Engineer
Close, Jensen and Miller, P.C.
1137 Silas Deane Highway
Wethersfield, CT 06109
(860) 563-9375 ext. 2630

This email has been scanned by the Symantec Email Security.cloud service.

NOTICE: This e-mail and any attachments may contain confidential and proprietary information of Aquarion Water Company, which information is intended only for the use of the recipient(s) to whom this email is addressed. If you are not the intended recipient, please notify the sender immediately, and permanently delete the original message and any attachments.

This email has been scanned by the Symantec Email Security.cloud service.

This email has been scanned by the Symantec Email Security.cloud service.

NOTICE: This e-mail and any attachments may contain confidential and proprietary information of Aquarion Water Company, which information is intended only for the use of the recipient(s) to whom this email is addressed. If you are not the intended recipient, please notify the sender immediately, and permanently delete the original message and any attachments.

This email has been scanned by the Symantec Email Security.cloud service.

Eric Buckley

From: Eric Buckley <EBuckley@cjmpc.com>
Sent: Monday, November 28, 2022 9:47 AM
To: Ingrid Jacobs
Subject: RE: North Stamford Reservoir Dam - #13501

Ingrid –
Thank you so much for the help. This should pretty much get us to where we need to be.
Hope you had and have a nice holiday!

Eric

From: Ingrid Jacobs <IJacobs@aquarionwater.com>
Sent: Monday, November 28, 2022 9:44 AM
To: Eric Buckley <EBuckley@cjmpc.com>
Subject: RE: North Stamford Reservoir Dam - #13501

Good morning Eric,

I spoke with our VP regarding you concerns on the NDA and he's willing to share the elevations without you signing an NDA.

As Hetal noted in her email we cannot share the plans, etc. but I've provided elevations below from the March 1995 Design Report:

Spillway Crest Elevation: 199.8 feet
Top of Dam: 203.9 feet
Top of Dike: 206.0 feet
100 Year Flood: 202.4 feet
½ PMF: 207.0 feet
PMF: 209.8 feet

Spillway design flood: PMF

Note: All elevations refer to USGS Datum (NGVD29).

Let me know if you have any questions.

Thanks,
Ingrid

Ingrid M. Jacobs, PE
Manager | Water Resources & Infrastructure Planning
Aquarion Water Company
600 Lindley Street
Bridgeport, CT 06606
o: 203.337.5822 | m: 203.362.8119
ijacobs@aquarionwater.com

From: Eric Buckley <EBuckley@cjmpc.com>
Sent: Tuesday, November 22, 2022 7:04 AM
To: Ingrid Jacobs <IJacobs@aquarionwater.com>
Cc: Tom Ryan <tryan@cjmpc.com>; Michael Brady <MBrady@cjmpc.com>; Jeff Fontaine <JFontaine@cjmpc.com>
Subject: RE: North Stamford Reservoir Dam - #13501

Aquarion IT Notice - EXTERNAL EMAIL: Do not reply, click on links or open attachments unless you trust the sender AND know the content is safe. Report suspicious emails by forwarding to the IT help desk

Morning Ingrid,
I was wondering if you had a chance to review the following email and if you had any additional guidance as to how to proceed. If there's anything Aquarion needs from me to make a determination on the questions I had regarding the Confidentiality Statement, please let me know.

Thanks!

Eric Buckley

From: Eric Buckley
Sent: Friday, November 18, 2022 1:20 PM
To: Ingrid Jacobs <IJacobs@aquarionwater.com>
Subject: RE: North Stamford Reservoir Dam - #13501

Hi Ingrid,
Again, I really appreciate the help with this information as it relates to the replacement of the Lakeside Ave Bridge (#04069).
I tried to call today, but got your voicemail. Figured an email would be best.
I have no problem signing the Confidentiality Agreement, but in going through the listed items, I have a couple questions/concerns:

- Item 3 indicates that I cannot share the information with town, regional, state or federal entities. This information is necessary to develop hydraulic parameters of the reservoir specifically in how it would impact the bridge crossing. Generally, the engineering developed is documented in reports, including a hydrologic, hydraulic, regulatory (for flood management purposes) and a scour potential evaluation. This data being used to complete the water resources engineering would be expected to be included as backup data for the computations and results. Further, these reports would not only be archived by our office, but also submitted to the Department of Transportation for concurrence and included as part of the project file. Additionally, the town would be entitled to a copy of the reports as they are the owners of the bridge. Further, this bridge is being funded by the Federal Local Bridge Program administered by the state and overseen by the FHWA. They would have the ability to pull these reports upon a project audit.
- Item 7 indicates that the information must be returned and or disposed of upon request or at the end of its usefulness. Due to the documentation processes required of these engineering design jobs, this would not be possible.

I hope I'm not reading too much into this, but I want to do what's right by Aquarion as well as fulfill my responsibilities on this design project. Really, I'm just looking to develop a dam and spillway performance curve based on design hydrologic flows that I develop for the contributing watershed to facilitate design of the bridge replacement.
If you'd like to discuss further, I'll be in and out today, feel free to give me a call or let me know how to proceed by email.

Thanks!

Eric W Buckley
Water Resources / Environmental Engineer
Close, Jensen and Miller, P.C.
1137 Silas Deane Highway
Wethersfield, CT 06109
(860) 563-9375 ext. 2630

From: Ingrid Jacobs <IJacobs@aquarionwater.com>
Sent: Thursday, November 17, 2022 3:41 PM
To: Eric Buckley <EBuckley@cjmpc.com>
Subject: RE: North Stamford Reservoir Dam - #13501

Hello Eric,

I reviewed the 1991 H&H Study and Stability Analysis and the 1995 Design Report for dam improvements. From the report I can provide the dam elevations, flood elevations and spillway design flood. However, our VP of Engineering & Real Estate would like to sign an Non-Disclosure Agreement prior to releasing the data. Did you sign an NDA with Hetal? If so, can you please share with me. If not, please see attached. Once returned I'll forward the data.

Let me know if you have any questions.

Thanks,
Ingrid

Ingrid M. Jacobs, PE
Manager | Water Resources & Infrastructure Planning
Aquarion Water Company
600 Lindley Street
Bridgeport, CT 06606
o: 203.337.5822 | m: 203.362.8119
ijacobs@aquarionwater.com

Stewards of the Environment

From: Eric Buckley <EBuckley@cjmpc.com>
Sent: Wednesday, November 16, 2022 6:38 AM
To: Ingrid Jacobs <IJacobs@aquarionwater.com>
Cc: Michael Brady <MBrady@cjmpc.com>; Jeff Fontaine <JFontaine@cjmpc.com>
Subject: RE: North Stamford Reservoir Dam - #13501

Aquarion IT Notice - EXTERNAL EMAIL: Do not reply, click on links or open attachments unless you trust the sender AND know the content is safe. Report suspicious emails by forwarding to the IT help desk

---

Good morning, Ingrid,
Any word on the North Stamford Dam information I had requested?

Best,

Eric Buckley

From: Ingrid Jacobs <IJacobs@aquarionwater.com>
Sent: Wednesday, November 9, 2022 8:03 AM
To: Eric Buckley <EBuckley@cjmpc.com>
Subject: RE: North Stamford Reservoir Dam - #13501

Hello Eric,

I have requested the boxes from archive with, I hope, the H&H Study and additional information; however, they have not arrived yet.

Thanks,
Ingrid

Ingrid M. Jacobs, PE
Manager | Water Resources & Infrastructure Planning
Aquarion Water Company
600 Lindley Street
Bridgeport, CT 06606
o: 203.337.5822 | m: 203.362.8119
ijacobs@aquarionwater.com

Stewards of the Environment

From: Eric Buckley <EBuckley@cjmpc.com>
Sent: Wednesday, November 9, 2022 7:51 AM
To: Ingrid Jacobs <IJacobs@aquarionwater.com>
Subject: RE: North Stamford Reservoir Dam - #13501

Aquarion IT Notice - EXTERNAL EMAIL: Do not reply, click on links or open attachments unless you trust the sender AND know the content is safe. Report suspicious emails by forwarding to the IT help desk

---

Good morning, Ingrid,
I wanted to follow up with you and see if you were able to find any information on the dam and spillway geometry that would help with my efforts in developing design flows and water surface elevations as it would pertain to the Lakeside Drive Bridge over the reservoir.
As-builts would be great, or a hydraulic report or emergency action plan.

Please let me know if you need any additional information from me.

Thanks!

Eric Buckley

From: Eric Buckley
Sent: Monday, November 7, 2022 11:10 AM
To: Ingrid Jacobs <IJacobs@aquarionwater.com>
Subject: RE: North Stamford Reservoir Dam - #13501

Yes, absolutely…

Thanks for the help!

From: Ingrid Jacobs <IJacobs@aquarionwater.com>
Sent: Monday, November 7, 2022 10:47 AM
To: Eric Buckley <EBuckley@cjmpc.com>
Subject: RE: North Stamford Reservoir Dam - #13501

Hello Eric,

Can you please resend a copy of the 2019 correspondence?

Thanks,
Ingrid

Ingrid M. Jacobs, PE
Manager | Water Resources & Infrastructure Planning
Aquarion Water Company
600 Lindley Street
Bridgeport, CT 06606
o: 203.337.5822 | m: 203.362.8119
ijacobs@aquarionwater.com

Stewards of the Environment

From: Eric Buckley <EBuckley@cjmpc.com>
Sent: Monday, November 7, 2022 10:03 AM
To: Carolyn Giampe <CGiampe@aquarionwater.com>; Mike Liberante <MLiberante@aquarionwater.com>; Mike Claps <MClaps@aquarionwater.com>
Cc: Michael Brady <MBrady@cjmpc.com>; Jeff Fontaine <JFontaine@cjmpc.com>; Ingrid Jacobs <IJacobs@aquarionwater.com>
Subject: RE: North Stamford Reservoir Dam - #13501

Aquarion IT Notice - EXTERNAL EMAIL: Do not reply, click on links or open attachments unless you trust the sender AND know the content is safe. Report suspicious emails by forwarding to the IT help desk

---

Great, thank you for the help!

EB

From: Carolyn Giampe <CGiampe@aquarionwater.com>
Sent: Monday, November 7, 2022 9:56 AM
To: Eric Buckley <EBuckley@cjmpc.com>; Mike Liberante <MLiberante@aquarionwater.com>; Mike Claps <MClaps@aquarionwater.com>
Cc: Michael Brady <MBrady@cjmpc.com>; Jeff Fontaine <JFontaine@cjmpc.com>; Ingrid Jacobs <IJacobs@aquarionwater.com>
Subject: RE: North Stamford Reservoir Dam - #13501

Thanks Eric:

I am forwarding this along to Ingrid Jacobs who is the Mgr., Water Resources and Infrastructure Planning. Her group manages the dams / she is the best person to field your request.

Carolyn

Carolyn C. Giampe
Director, Sustainability & Environmental Management
Aquarion Water Company
714 Black Rock Rd.
Easton, CT 06612

office: (203) 445-7460
mobile: (203) 395-7702
cgiampe@aquarionwater.com

AQUARION Water Company
Stewards of the Environment™

From: Eric Buckley <EBuckley@cjmpc.com>
Sent: Monday, November 7, 2022 9:52 AM
To: Mike Liberante <MLiberante@aquarionwater.com>; Mike Claps <MClaps@aquarionwater.com>; Carolyn Giampe <CGiampe@aquarionwater.com>
Cc: Michael Brady <MBrady@cjmpc.com>; Jeff Fontaine <JFontaine@cjmpc.com>
Subject: North Stamford Reservoir Dam - #13501

Aquarion IT Notice - EXTERNAL EMAIL: Do not reply, click on links or open attachments unless you trust the sender AND know the content is safe. Report suspicious emails by forwarding to the IT help desk

---

Carolyn, Mike and Mike,
A couple of years ago I had corresponded with Hetal Shah regarding the North Stamford Reservoir Dam (13501) and its influence on bridge 04069, Lakeside Drive over the North Stamford Reservoir. Back then I never followed up as it looked like we were going to be rehabilitating the bridge and a hydraulic and scour analysis was not necessary. Subsequent to that, it has been determined that the bridge must be replaced in full as part of a CTDOT and City of Stamford joint project.
As we are going to need to design the replacement bridge with regards to hydraulic capacity and potential scour considerations, I'd like to start up that correspondence again with Aquarion. I had reached out to Hetal, but I understand she may no longer be in that position.
If possible, I'd like to review the hydraulic data that Aquarion has on the structure so that I might be able to develop stage and flow rating curves and hydraulic parameters that may influence sediment transport/scour about the bridge abutments. Hetal was going to look into the availability of a hydrologic and hydraulic report for the spillway and reservoir.

Attached is original correspondence our office had with Aquarion back in 2019.

Please let me know if there is any available information that you can share with me that would support this bridge project. Feel free to give me a call if needed.
Thanks in advance!

Eric W Buckley
Water Resources / Environmental Engineer
Close, Jensen and Miller, P.C.
1137 Silas Deane Highway
Wethersfield, CT 06109
(860) 563-9375 ext. 2630

This email has been scanned by the Symantec Email Security.cloud service.

NOTICE: This e-mail and any attachments may contain confidential and proprietary information of Aquarion Water Company, which information is intended only for the use of the recipient(s) to whom this email is addressed. If you are not the intended recipient, please notify the sender immediately, and permanently delete the original message and any attachments.

This email has been scanned by the Symantec Email Security.cloud service.

NOTICE: This e-mail and any attachments may contain confidential and proprietary information of Aquarion Water Company, which information is intended only for the use of the recipient(s) to whom this email is addressed. If you are not the intended recipient, please notify the sender immediately, and permanently delete the original message and any attachments.

This email has been scanned by the Symantec Email Security.cloud service.

NOTICE: This e-mail and any attachments may contain confidential and proprietary information of Aquarion Water Company, which information is intended only for the use of the recipient(s) to whom this email is addressed. If you are not the intended recipient, please notify the sender immediately, and permanently delete the original message and any attachments.

This email has been scanned by the Symantec Email Security.cloud service.

NOTICE: This e-mail and any attachments may contain confidential and proprietary information of Aquarion Water Company, which information is intended only for the use of the recipient(s) to whom this email is addressed. If you are not the intended recipient, please notify the sender immediately, and permanently delete the original message and any attachments.

This email has been scanned by the Symantec Email Security.cloud service.

NOTICE: This e-mail and any attachments may contain confidential and proprietary information of Aquarion Water Company, which information is intended only for the use of the recipient(s) to whom this email is addressed. If you are

not the intended recipient, please notify the sender immediately, and permanently delete the original message and any attachments.

Spillway rating curve

2 sections

		length		
Concrete broad crest		150	eastern	
Ogee type		130	western	unknown design head
	total	280		

	NGVD '29	NAVD '88	Δ: 1.06
Spillway crest elevation	199.8	198.7	
100 yr flood	202.4	201.3	2.6 feet to 100-year design el.
dam crest elevation	203.9	202.8	+1.5 feet to dam overtop.

$Q = CLH^{\frac{3}{2}}$

	Q-total				Q-segmented											
	Total spillway				Concrete Broad Crest				Ogee Crest					elevation	% difference
	Flow	Weir Coefficient	Length	Head	Flow	Weir Coefficient	Length	Head	Flow	Weir Coefficient	Length	Head	Flow Sums		$\frac{\lvert Q_{tot} - Q_{seg}\rvert}{(Q_{tot} + Q_{seg})/2}$
	Q	C	L	H	Q	C	L	H	Q	C	L	H			
	0	3.1	280	0	0	3.1	150	0	0	3.2	130	0	0	198.7	
	27			0.1	15			0.1	13			0.1	28	198.8	3.6
	78			0.2	42			0.2	37			0.2	79	198.9	1.3
	143			0.3	76			0.3	68			0.3	144	199	0.7
	220			0.4	118			0.4	105			0.4	223	199.1	1.4
	307			0.5	164			0.5	147			0.5	311	199.2	1.3
	403			0.6	216			0.6	193			0.6	409	199.3	1.5
	508			0.7	272			0.7	244			0.7	516	199.4	1.6
	621			0.8	333			0.8	298			0.8	631	199.5	1.6
	741			0.9	397			0.9	355			0.9	752	199.6	1.5
	868			1	465			1	416			1	881	199.7	1.5
To 100-yr event	1001			1.1	536			1.1	480			1.1	1016	199.8	1.5
	1141			1.2	611			1.2	547			1.2	1158	199.9	1.5
	1287			1.3	689			1.3	617			1.3	1306	200	1.5
	1438			1.4	770			1.4	689			1.4	1459	200.1	1.4
	1595			1.5	854			1.5	764			1.5	1618	200.2	1.4
	1757			1.6	941			1.6	842			1.6	1783	200.3	1.5
	1924			1.7	1031			1.7	922			1.7	1953	200.4	1.5
	2096			1.8	1123			1.8	1005			1.8	2128	200.5	1.5
	2273			1.9	1218			1.9	1089			1.9	2307	200.6	1.5
	2455			2	1315			2	1177			2	2492	200.7	1.5
	2641			2.1	1415			2.1	1266			2.1	2681	200.8	1.5
	2832			2.2	1517			2.2	1357			2.2	2874	200.9	1.5
	3028			2.3	1622			2.3	1451			2.3	3073	201	1.5
	3227			2.4	1729			2.4	1547			2.4	3276	201.1	1.5
	3431			2.5	1838			2.5	1644			2.5	3482	201.2	1.5
	3639			2.6	1949			2.6	1744			2.6	3693	201.3	1.5
	3851			2.7	2063			2.7	1846			2.7	3909	201.4	1.5
	4067			2.8	2179			2.8	1949			2.8	4128	201.5	1.5
	4287			2.9	2296			2.9	2054			2.9	4350	201.6	1.5
	4510			3	2416			3	2162			3	4578	201.7	1.5
	4738			3.1	2538			3.1	2271			3.1	4809	201.8	1.5
	4969			3.2	2662			3.2	2381			3.2	5043	201.9	1.5
	5203			3.3	2788			3.3	2494			3.3	5282	202	1.5
remaining spillway capacity	5442			3.4	2915			3.4	2608			3.4	5523	202.1	1.5
	5684			3.5	3045			3.5	2724			3.5	5769	202.2	1.5
	5929			3.6	3176			3.6	2841			3.6	6017	202.3	1.5
	6178			3.7	3309			3.7	2961			3.7	6270	202.4	1.5
	6430			3.8	3445			3.8	3082			3.8	6527	202.5	1.5
	6685			3.9	3581			3.9	3204			3.9	6785	202.6	1.5
	6944			4	3720			4	3328			4	7048	202.7	1.5
	7206			4.1	3860			4.1	3454			4.1	7314	202.8	1.5

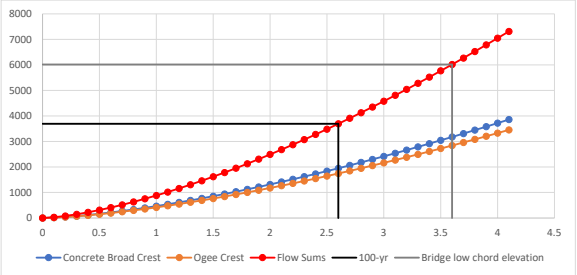

low chord elevation

North Stamford Reservoir

2 December 2022

INPUT	OUTPUT
Geographic, NAD83	Geographic, NAD83
Vertical - NGVD29 (Vertcon94), U.S. Feet	Vertical - NAVD88, U.S. Feet

06141

1/1

Latitude:	41 07 30	**Latitude:**	41 07 30.00000
Longitude:	73 32 26	**Longitude:**	73 32 26.00000
Elevation/Z:	0	**Elevation/Z:**	-1.063

Remark:

North Stamford Reservoir Dam

Info Map DOWNLOAD DATA

NID ID CT00048 Location Fairfield, Connecticut Owner Name AQUARION WATER COMPANY OF CONNECTICUT Owner Type Public Utility Data Updated 03/29/2021

SUMMARY | DESCRIPTION | STRUCTURE | INSPECTION AND EVALUATION | RESPONSE PREPAREDNESS | ATTACHMENTS

Dam Structure

Primary Dam Type
Concrete

Dam Types
Concrete, Earth

Core
Concrete

Foundation
Unlisted/Unknown

Dam Height (Ft)
40

Hydraulic Height (Ft)
No Data Entered

Structural Height (Ft)
No Data Entered

NID Height (Ft)
40

Dam Length (Ft)
1,065

Volume (Cubic Yards)
No Data Entered

Year Completed
1908

NID Storage (Acre-Ft)
2,060

Max Storage (Acre-Ft)
2,060

Normal Storage (Acre-Ft)
1,571

Surface Area (Acres)
132

Drainage Area (Sq Miles)
23.2

Max Discharge (Cubic Ft / Second)
7,350

Appurtenant Features

Spillway Type
Uncontrolled

Spillway Width (Ft)
280

Number of Locks

Length of Locks (Ft)

Lock Width (Ft)

Appendix C – Data Collection and Field Review Forms

Appendix A – Forms

- **Data Collection and Field Review (pages 9.A-1 to 9.A-11)**
- **Hydraulic Data (pages 9.A-13 to 9.A-16)**

DATA COLLECTION AND FIELD REVIEW

I. GENERAL PROJECT DATA

Bridge No.: 04069
Town: Stamford
Feature carried: Lakeside Drive
Quadrangle: Pound Ridge

County: Fairfield
Feature crossed: North Stamford Reservoir
DEP watershed basin no.: 7405

Functional class:

- ☐ urban principal arterial-interstate
- ☐ urban principal arterial-other expwy.
- ☐ urban principal arterial-other
- ☐ urban minor arterial
- ☐ urban collector
- ☒ urban local
- ☐ rural principal arterial-interstate
- ☐ rural principal arterial-other expwy.
- ☐ rural principal arterial-other
- ☐ rural minor arterial
- ☐ rural major collector
- ☐ rural minor collector
- ☐ rural local

Year built: 1936
Overall NBIS structure rating: 3
USGS total scour index: 62

Year of reconstruction: 1993
NBIS Item 113: 8
Sufficiency rating: 30.9

Plans available? ☐ yes ☒ no

II. SUPERSTRUCTURE INFORMATION

Bridge width: 24.8 ~~m~~ (ft)
Number of spans: 1

Bridge length: 36 ~~m~~ (ft)
Bridge skew: 0 (degrees)

Bearing connection type: ☒ positive connection ☐ no positive connection

III. HYDROLOGIC AND HYDRAULIC INFORMATION

Watershed area: 21.5 (sq. mi.) to the reservoir spillway (design point)

Is it tidally influenced? ☐ yes ☒ no

What information is available?

- ☐ hydraulic report
- ☐ scour report
- ☐ floodway analysis report
- ☐ SCEL analysis
- ☐ comparative report
- ☐ FEMA F.I.S.
- ☒ Other: USGS Bridge and Channel Assessment

	Source	2 Yr. Event	10 Yr. Event	50 Yr. Event	100 Yr. Event	500 Yr. Event
Flow rates ~~m^3/s~~ (cfs)						
	DESIGN	900	1960	3130	3690	5160
Precipitation ~~mm~~ (in)	Atlas 14	3.67	5.51	7.51	8.43	11.1
Tidal elevations m (ft)						

Elevations ~~m~~ (ft.)							
At Structure			Water Surface at Approach Cross Section				
Streambed	Low Chord	Roadway	2 Yr. Event	10 Yr. Event	50 Yr. Event	100 Yr. Event	500 Yr. Event
175	202.3	203.7	199.7	200.5	201.2	201.5	202.3

Pressure flow at design storm? ☐ yes ☒ underclearance -0.8 m (ft.)

Comments: Approach cross section = 4
Hydraulic profile is defined by flow over the weir of the North Stamford Reservoir Dam. Bridge Opening provides for negligible influence

IV. SITE DATA

A. Existing structure(s) – Provide sketch of culvert/structure with dimensions and brief description.

See attached pictures.

Comments: Include structure or culvert type and condition. Note particularly any scour adjacent to abutments or at culvert outlet and the presence of debris or sediment. Also note the location of any utilities in the area of the crossing.

Single span reinforced concrete deck with steel multi-girders on stone masonry abutments. Superstructure is in "serious" condition (rated 3). No active scouring of the streambed is apparent. There is one, 16" Aquarion water main supported by the structure.

B. High water marks – Describe the nature and location of any apparent high water marks and relate to a date of occurrence, if possible.

No high water marks noted.

C. Maximum allowable headwater – Describe the nature of the apparent controlling feature and note its location.

Max. allowable headwater is 201.7 feet at sag point of vertical curve, approximately 130 feet east of the crossing. Based on 2' of freeboard to the low point.

D. Fish passage requirements – Comment on the apparent need for fish passage or impediments to same; such as dams or restrictive crossings in the area.

The current crossing is a single span with an open bottom. There are no apparent impediments to fish passage.

V. PERIPHERAL SITE DATA

A. Hydraulic control – Note location and description.

The hydraulic inadequacy of the existing structure (weir flow) creating a backwater within the studies reach is the hydraulic control. The presence of the low head rock weirs beneath the structure increases the backwater effects of the crossing.

B. Upstream and downstream structures – Provide sketches and brief descriptions of existing bridges/culverts. Include dimensions.

Comments: None upstream within hydraulic influence. Downstream, North Stamford Reservoir Dam provides the hydraulic control for the reservoir. Dam features include Ogee crest principal spillway (130 feet long at elevation 198.7), Concrete Broad Crest principal spillway (150 feet long at elevation 198.7 feet), Concrete emergency spillway (380 feet long at elevation 202.8) and an Earthen Dike (410 feet long at elevation 204.9).

C. Watershed area – Check watershed boundaries for accuracy. Note current land uses within watershed.

The drainage area to the reservoir dam is 21.5 square miles. This design point is the controlling feature of the project study. Approximately 22% of the watershed is developed (including open space), 64% of the drainage area is wooded, 9% is wetlands and 1% is open water.

D. Flow control structures within watershed – Note the location and type of all significant flow control structures (dams, etc.) within the watershed. Provide sketches with dimensions as required.

There are water supply reservoirs within the watershed, though no known flow control structures. For design it is reasonable to assume that the reservoirs are full (for supply purposes) and there is no appreciable storage available.

E. Site photographs – Attach to report. Include an index and sketch of photograph locations.

See Appendix A of the associated Hydraulic Design Report.

VI. STREAM CHANNEL AND RELATED ASPECTS

A. Stream characterization

Twenty Groupings of Stream Characteristics (check box)

	Identifier	Drainage Area	Streambed Slope	Streambed Soils	Land Use
☐	A	Large	Low	SD	S/F
☐	B	Large	Low	SD	Urban
☐	C	Large	Moderate	SD	Forested
☐	D	Medium	Moderate	SD	Urban
☐	E	Medium	Moderate	SD	S/F
☐	F	Medium	Moderate	CLAY	S/F
☐	G	Medium	Moderate	TILL	S/F
☐	H	Medium	Moderate	SD	Forested
☐	I	Medium	Moderate	TILL	Forested
☐	J	Small	Low	SD	Urban
☐	K	Small	Moderate	TILL	Urban
☒	L	Small	Low	SD	S/F
☐	M	Small	Moderate	SD	S/F
☐	N	Small	Moderate	SD	Forested
☐	O	Small	Low	CLAY	S/F
☐	P	Small	Steep	TILL	S/F
☐	Q	Small	Moderate	TILL	S/F
☐	R	Small	Low	TILL	S/F
☐	S	Small	Moderate	TILL	Forested
☐	T	Small	Steep	TILL	Forested

Drainage area
- Small: $\leq 64.75 km^2$ ($25 mi^2$)
- Medium: $> 64.75 km^2$ ($25 mi^2$) and $\leq 259 km^2$ ($100 mi^2$)
- Large: $> 259 km^2$ ($100 mi^2$)

Streambed slope
- Low: ≤ 4.76 m/km (25 ft/mi)
- Moderate: > 4.76 m/km (25 ft/mi) and ≤ 19.05 m/km (100 ft.mi)
- Steep: > 19.05 m/km (100 ft/mi)

Streambed soils: SD = Stratified Drift

Land Use: S/F = Suburban or Farming

B. Channel stability

Previous NBIS Item 61 rating: 6

Lateral stability: ☒ stable ☐ unstable

Bank erosion:
☒ none ☐ light fluvial erosion ☐ heavy fluvial erosion ☐ mass wasting

Streambed: ☒ stable ☐ aggradating ☐ degrading

Armoring potential: ☐ none ☐ low ☒ moderate ☐ high

Geomorphic factors that affect stream stability (circle factors that apply)

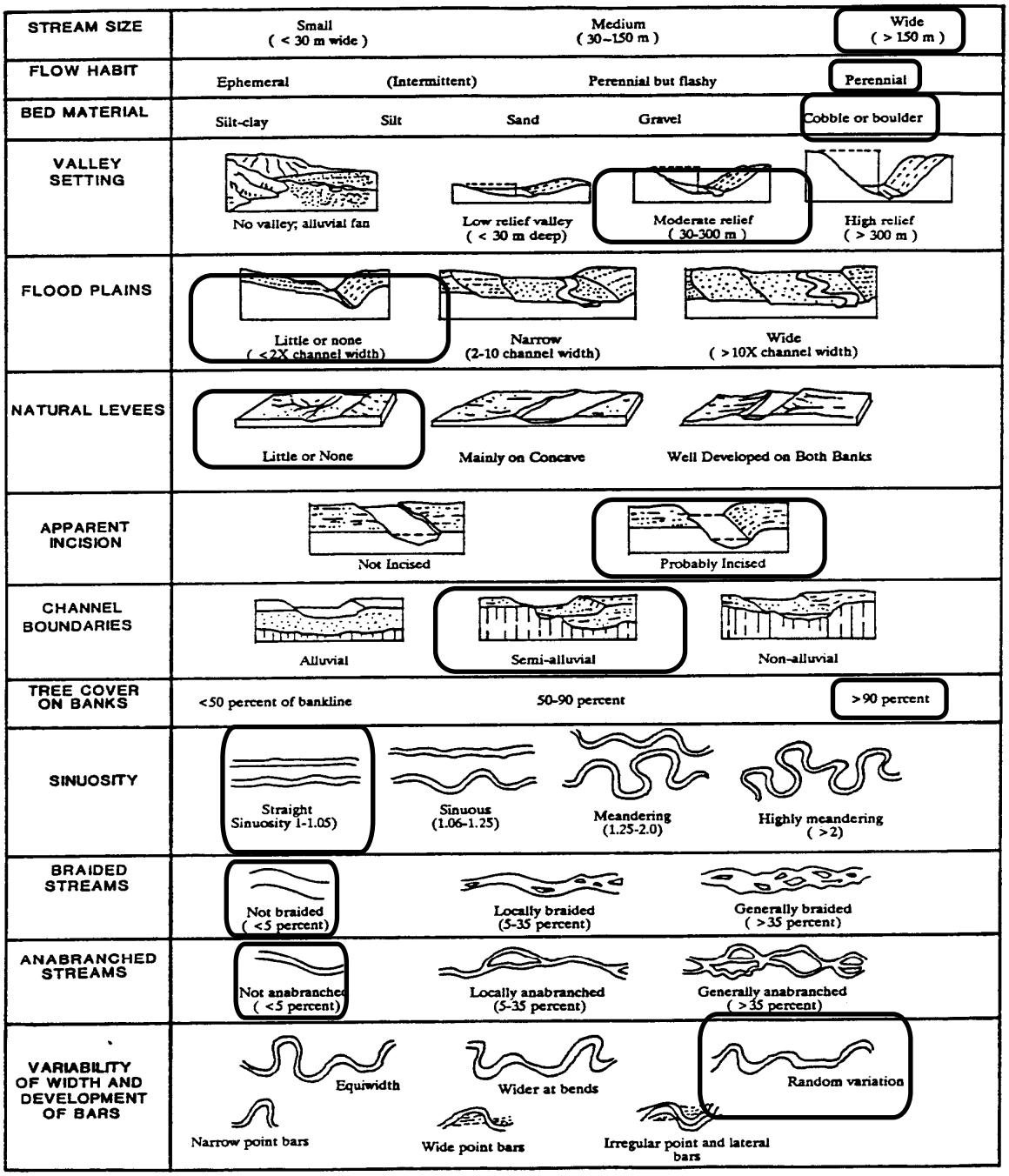

Source: Adapted From Brice and Blodgett, 1978

(See also FHWA HEC-20, "Stream Stability at Highway Structures" for discussion of the above factors)

Secondary bed material: ☐ sand ☒ gravel ☐ boulders ☐ manmade
☐ silt/clay ☐ cobble ☐ bedrock

Bank protection (Abutment Protection)

Type ☐ none ☐ modified ☐ intermediate ☒ standard
☐ concrete ☐ slope paving ☐ absent
☐ other

Condition ☐ n/a ☒ good ☐ weathered ☐ slumped
☐ poor ☐ missing ☐ fair

Comment on the need (if any) for training walls, cutoff walls or special slope or channel protection.

The banks are heavily vegetated and the root matrix is well defined.
Bank protection for untouched areas is not expected to be necessary.

C. Channel and overbank roughness coefficients

Basic channel description: ☐ channel in earth ☐ channel cut into rock
☐ channel fine gravel ☒ channel coarse gravel

Surface irregularity of channel:
☒ smooth – best obtainable section for materials involved
☐ minor – slightly eroded or scoured side slopes
☐ moderate – moderately sloughed or eroded side slopes.
☐ severe – badly sloughed banks of natural channels or badly eroded sides of man-made channels - jagged and irregular sides or bottom sections of channels in rock.

Variations in shape and size of cross sections
☒ changes in size or shape occurring gradually
☐ large and small sections alternating occasionally or shape changes causing occasional shifting of main flow from side to side.
☐ large and small sections alternating frequently or shape changes causing frequent shifting of main flow from side to side.

Channel obstructions – (Judge the relative effect of obstructions – consider the degree to which the obstructions reduce the average cross sectional area, character of obstructions, and location and spacing of obstructions).

NOTE: Smooth or rounded objects create less turbulence than sharp, angular objects.

The effect of obstructions is:
☒ negligible
☐ minor
☐ appreciable
☐ severe

Degree of vegetation - (Note amount and character of foliage).

The effect of vegetative growth upon flow conditions is:

☐ LOW - Dense growths of flexible turf grasses where average depth of flow is 2 to 3 times the height of vegetation. Supple seedling tree switches where the average depth of flow is 3 to 4 times the height of the vegetation.

☐ MEDIUM - Turf grasses where the average depth of flow is 1 to 2 times the height of vegetation. Stemmy grasses, weeds or tree seedlings, (moderate cover), average depth of flow 2 to 3 times the height of vegetation. Bushy growths, (moderately dense), along channel side slopes with no significant vegetation along channel bottom.

☒ HIGH - Turf grasses where average height is about equal to the average depth of flow. Willow of Cottonwood trees 8 to 10 years old with some weeds or brush. Bushy growths about 1 year old with some weeks. No significant vegetation along channel bottom.

☐ VERY HIGH - Turf grasses where the average depth of flow is less than one half the height of vegetation. Bushy growths about 1 year old intergrown with weeds. Dense growth of cattails along channel bottom. Trees intergrown with weeds and brush (thick growth).

Additional comments:

_____

_____

_____

_____

_____

VII. HYDRAULIC VULNERABILITY

Previous Item 71 rating: 7

Is there confluence present? ☐ yes ☒ no

Angle of attack (flood flow): ☐ yes ☒ no

Bends in channel: ☐ upstream of bridge ☐ downstream of bridge ☒ straight channel reach ☐ at bridge

Velocity order of magnitude: 4 (ft/s) at design event flows through the crossing

Trapping potential: ☒ low ☐ medium ☐ high

Debris potential: ☐ low ☒ moderate ☐ high

Overtopping relief: ☒ none ☐ left approach ☐ right approach ☐ on bridge ☐ relief bridge ☐ cannot be determined

Primary bed material: ☐ sand ☐ gravel ☐ boulders ☐ manmade
☐ silt/clay ☒ cobble ☐ bedrock

Comments: _____

VIII. VISUAL SCOUR EVIDENCE

USGS observed scour index: 30

History of scour problem: ☐ yes ☒ no

Comments: No scour evident within one bridge length, single span bridge (no pier), no scour at abutment. Standard riprap along the stem of the abutment in good condition.

Note: Comment should address any evidence of scour at ALL substructure units.

CONTRACTION SCOUR SUSCEPTIBILITY

Channel width upstream: 600 ~~m~~ (ft.)
Channel width under bridge: 36 ~~m~~ (ft.) (less pier width)
Channel width ratio (channel width upstream / channel width under the bridge: 17:1

Overbank flow: ☒ yes ☐ no

Percent of flow in main channel of the approach section:
☒ >90% ☐ 75%-90% ☐ 50%-75% ☐ 25%-50% ☐ <25%

Average bed material size (D_{50}):
@ approach section 50 mm (~~in~~) ☐ sample taken for sieve analysis
@ bridge 50 mm (~~in~~) ☐ sample taken for sieve analysis

Contraction scour susceptibility rating: ☒ low ☐ medium ☐ high

Comments: Bed material size estimated in the field, corresponding to observed coarse gravel to cobble. Contraction scour susceptibility considered low due to tailwater from dam and the observed low flow velocity.

ABUTMENT SUSCEPTIBILITY

Which abutment is worst?: ☐ left ☐ right

Observed scour depth: 0 ~~m~~ (ft.) Remaining embedment in river bed: unknown m (ft)

Abutment shape: ☐ vertical ☒ vertical with wingwalls ☐ spillthrough

Abutment location: ☒ in channel ☐ at bank ☐ set back

Abutment foundation: ☐ unknown ☒ spread footing ☐ pile bent ☐ friction piles ☐ EB piles ☐ set in rock

Pile type: ☐ metal ☐ concrete ☐ timber ☒ N/A

Pile length: _____ m (feet)

Abutment material: ☐ timber ☐ concrete ☐ metal ☒ stone

Angle of inclination: _____ (degrees)

Primary bed material: ☐ sand ☐ gravel ☐ boulders ☐ manmade ☐ silt/clay ☒ cobble ☐ bedrock

Are borings available? ☒ yes ☐ no

Abutment protection

Type:	☐ modified	☐ intermediate	☒ standard	☐ slope paving
	☐ concrete	☐ other	☐ absent	☐ none
Permanent or Temporary:		☐ n/a	☐ permanent	☐ temporary
Condition:	☒ good	☐ weathered	☐ slumped	☐ missing
	☐ fair	☐ poor	☐ N/A	

Abutment exposure due to scour:

☒ none ☐ no exposure ☐ footing exposed ☐ piles exposed
☐ undermining ☐ settlement ☐ failed

Abutment susceptibility rating ☒ low ☐ medium ☐ high

Comments: _____

PIER SUSCEPTIBILITY

Worst pier number: _____
Observed scour depth: _____ ~~m~~ (ft.) Remaining embedment in river bed: _____ m (ft)

Angle of attack flood flow: _____ (degrees)

Pier foundation: ☐ unknown ☐ spread footing ☐ pile bent
☐ EB piles ☐ set in rock ☐ friction piles ☐ N/A

Pile type: ☐ metal ☐ concrete ☐ timber ☐ N/A

Pile length: _____

Pier material:
☐ concrete ☐ stone ☐ wood ☐ metal ☐ N/A

Pier shape: ☐ solid pier with square nose ☐ solid pier with round nose
☐ solid pier with sharp nose ☐ column with square nose ☐ column with round nose
☐ column with sharp nose ☐ cylinders/group of cylinders

Pier width: _____ Pier dimensions: _____

Cap/Footing dimensions: _____

Pier exposure due to scour: ☐ none ☐ no exposure ☐ footing exposed
☐ piles exposed ☐ undermining ☐ settlement
☐ failed

Pier protection

Type:	☐ modified	☐ intermediate	☐ standard	☐ slope paving
	☐ concrete	☐ other	☐ absent	☐ none
Permanent or Temporary:		☐ n/a	☐ permanent	☐ temporary
Condition:	☐ good	☐ weathered	☐ slumped	☐ missing
	☐ fair	☐ poor	☐ N/A	

Primary bed material: ☐ sand ☐ gravel ☐ boulders ☐ manmade
☐ silt/clay ☐ cobble ☐ bedrock

Are borings available? ☐ yes ☐ no

Pier susceptibility rating ☐ low ☐ medium ☐ high

Comments:_____
_____
_____
_____

Appendix D – Existing Conditions Analysis

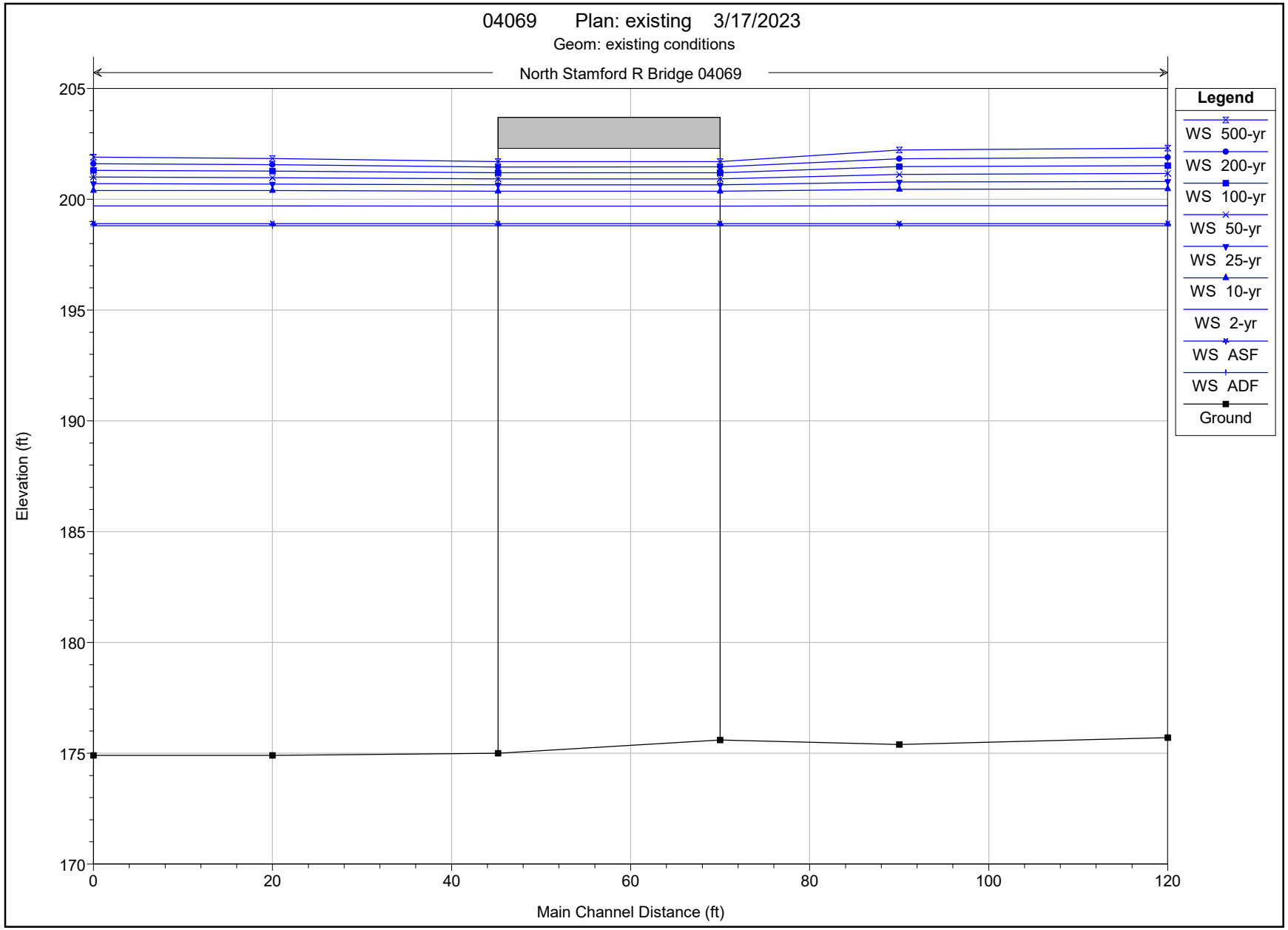
04069 Plan: existing 3/17/2023
Geom: existing conditions
North Stamford R Bridge 04069
Legend
WS 500-yr
WS 200-yr
WS 100-yr
WS 50-yr
WS 25-yr
WS 10-yr
WS 2-yr
WS ASF
WS ADF
Ground
Elevation (ft)
205
200
195
190
185
180
175
170
0
20
40
60
80
100
120
Main Channel Distance (ft)

HEC-RAS Plan: existing River: North Stamford R Reach: Bridge 04069

Reach	River Sta	Profile	Q Total	Min Ch El	W.S. Elev	Crit W.S.	E.G. Elev	E.G. Slope	Vel Chnl	Flow Area	Top Width	Froude # Chl
			(cfs)	(ft)	(ft)	(ft)	(ft)	(ft/ft)	(ft/s)	(sq ft)	(ft)	
Bridge 04069	4	2-yr	900.00	175.70	199.71	178.12	199.72	0.000001	0.35	2549.41	656.62	0.01
Bridge 04069	4	10-yr	1960.00	175.70	200.47	179.32	200.47	0.000002	0.74	2636.48	665.12	0.03
Bridge 04069	4	25-yr	2440.00	175.70	200.80	179.77	200.81	0.000004	0.91	2675.19	668.90	0.03
Bridge 04069	4	50-yr	3130.00	175.70	201.16	180.37	201.18	0.000006	1.15	2717.02	672.98	0.04
Bridge 04069	4	100-yr	3690.00	175.70	201.52	180.86	201.55	0.000007	1.34	2758.50	677.03	0.05
Bridge 04069	4	200-yr	4295.00	175.70	201.89	181.22	201.93	0.000010	1.53	2801.55	681.23	0.05
Bridge 04069	4	500-yr	5160.00	175.70	202.31	181.67	202.36	0.000013	1.81	2850.36	686.00	0.06
Bridge 04069	4	ADF	38.00	175.70	198.80	176.18	198.80	0.000000	0.02	2443.40	642.95	0.00
Bridge 04069	4	ASF	73.00	175.70	198.90	176.38	198.90	0.000000	0.03	2454.99	645.90	0.00
Bridge 04069	3	2-yr	900.00	175.40	199.71	178.30	199.72	0.000001	0.53	1702.76	601.11	0.02
Bridge 04069	3	10-yr	1960.00	175.40	200.45	179.75	200.47	0.000005	1.11	1758.96	615.99	0.04
Bridge 04069	3	25-yr	2440.00	175.40	200.78	180.27	200.81	0.000008	1.37	1783.76	622.57	0.05
Bridge 04069	3	50-yr	3130.00	175.40	201.13	181.03	201.17	0.000013	1.73	1810.20	629.57	0.06
Bridge 04069	3	100-yr	3690.00	175.40	201.47	181.47	201.54	0.000017	2.01	1836.46	636.52	0.07
Bridge 04069	3	200-yr	4295.00	175.40	201.83	181.91	201.91	0.000021	2.30	1863.55	643.70	0.08
Bridge 04069	3	500-yr	5160.00	175.40	202.23	182.52	202.34	0.000029	2.72	1893.68	651.68	0.10
Bridge 04069	3	ADF	38.00	175.40	198.80	175.99	198.80	0.000000	0.02	1633.57	582.07	0.00
Bridge 04069	3	ASF	73.00	175.40	198.90	176.22	198.90	0.000000	0.04	1641.17	584.44	0.00
Bridge 04069	2.5		Bridge									
Bridge 04069	2	2-yr	900.00	174.90	199.70	179.41	199.71	0.000003	0.72	1244.94	409.70	0.03
Bridge 04069	2	10-yr	1960.00	174.90	200.39	181.77	200.43	0.000012	1.52	1287.25	427.85	0.06
Bridge 04069	2	25-yr	2440.00	174.90	200.69	182.37	200.74	0.000018	1.87	1305.29	435.58	0.07
Bridge 04069	2	50-yr	3130.00	174.90	200.98	183.17	201.06	0.000028	2.37	1323.09	443.22	0.09
Bridge 04069	2	100-yr	3690.00	174.90	201.27	183.77	201.39	0.000038	2.75	1340.92	450.87	0.10
Bridge 04069	2	200-yr	4295.00	174.90	201.56	184.37	201.71	0.000049	3.16	1358.64	458.47	0.12
Bridge 04069	2	500-yr	5160.00	174.90	201.84	185.19	202.06	0.000068	3.75	1375.94	465.89	0.14
Bridge 04069	2	ADF	38.00	174.90	198.80	176.05	198.80	0.000000	0.03	1190.08	386.17	0.00
Bridge 04069	2	ASF	73.00	174.90	198.90	176.39	198.90	0.000000	0.06	1196.19	388.79	0.00
Bridge 04069	1	2-yr	900.00	174.90	199.70	177.87	199.70	0.000001	0.49	1847.63	520.56	0.02
Bridge 04069	1	10-yr	1960.00	174.90	200.40	179.13	200.42	0.000005	1.03	1904.40	531.66	0.04
Bridge 04069	1	25-yr	2440.00	174.90	200.70	179.61	200.72	0.000007	1.27	1928.73	536.42	0.05
Bridge 04069	1	50-yr	3130.00	174.90	201.00	180.24	201.04	0.000011	1.60	1953.06	541.17	0.06
Bridge 04069	1	100-yr	3690.00	174.90	201.30	180.70	201.35	0.000014	1.87	1977.39	545.93	0.07
Bridge 04069	1	200-yr	4295.00	174.90	201.60	181.20	201.67	0.000018	2.15	2001.72	550.69	0.08
Bridge 04069	1	500-yr	5160.00	174.90	201.90	181.85	202.00	0.000026	2.55	2026.05	555.44	0.09
Bridge 04069	1	ADF	38.00	174.90	198.80	175.69	198.80	0.000000	0.02	1774.64	506.29	0.00

HEC-RAS Plan: existing River: North Stamford R Reach: Bridge 04069 (Continued)

Reach	River Sta	Profile	Q Total	Min Ch El	W.S. Elev	Crit W.S.	E.G. Elev	E.G. Slope	Vel Chnl	Flow Area	Top Width	Froude # Chl
			(cfs)	(ft)	(ft)	(ft)	(ft)	(ft/ft)	(ft/s)	(sq ft)	(ft)	
Bridge 04069	1	ASF	73.00	174.90	198.90	175.91	198.90	0.000000	0.04	1782.75	507.87	0.00

Plan: existing North Stamford R Bridge 04069 RS: 2.5 Profile: 10-yr

E.G. US. (ft)	200.47	Element	Inside BR US	Inside BR DS
W.S. US. (ft)	200.45	E.G. Elev (ft)	200.45	200.45
Q Total (cfs)	1960.00	W.S. Elev (ft)	200.37	200.37
Q Bridge (cfs)	1960.00	Crit W.S. (ft)	181.36	181.30
Q Weir (cfs)		Max Chl Dpth (ft)	24.77	25.37
Weir Sta Lft (ft)		Vel Total (ft/s)	2.32	2.31
Weir Sta Rgt (ft)		Flow Area (sq ft)	844.90	846.88
Weir Submerg		Froude # Chl	0.08	0.08
Weir Max Depth (ft)		Specif Force (cu ft)	10094.39	10155.20
Min El Weir Flow (ft)	203.71	Hydr Depth (ft)	23.53	23.59
Min El Prs (ft)	202.30	W.P. Total (ft)	57.87	58.07
Delta EG (ft)	0.04	Conv. Total (cfs)	299972.0	300477.4
Delta WS (ft)	0.06	Top Width (ft)	35.90	35.90
BR Open Area (sq ft)	914.25	Frctn Loss (ft)	0.00	0.00
BR Open Vel (ft/s)	2.32	C & E Loss (ft)	0.00	0.02
BR Sluice Coef		Shear Total (lb/sq ft)	0.04	0.04
BR Sel Method	Energy only	Power Total (lb/ft s)	0.09	0.09

Plan: existing North Stamford R Bridge 04069 RS: 2.5 Profile: 100-yr

E.G. US. (ft)	201.54	Element	Inside BR US	Inside BR DS
W.S. US. (ft)	201.47	E.G. Elev (ft)	201.47	201.47
Q Total (cfs)	3690.00	W.S. Elev (ft)	201.19	201.19
Q Bridge (cfs)	3690.00	Crit W.S. (ft)	183.73	183.67
Q Weir (cfs)		Max Chl Dpth (ft)	25.59	26.19
Weir Sta Lft (ft)		Vel Total (ft/s)	4.22	4.21
Weir Sta Rgt (ft)		Flow Area (sq ft)	874.56	876.47
Weir Submerg		Froude # Chl	0.15	0.15
Weir Max Depth (ft)		Specif Force (cu ft)	11147.20	11207.23
Min El Weir Flow (ft)	203.71	Hydr Depth (ft)	24.36	24.41
Min El Prs (ft)	202.30	W.P. Total (ft)	58.73	58.92
Delta EG (ft)	0.15	Conv. Total (cfs)	314627.6	315082.4
Delta WS (ft)	0.20	Top Width (ft)	35.90	35.90
BR Open Area (sq ft)	914.25	Frctn Loss (ft)	0.00	0.00
BR Open Vel (ft/s)	4.22	C & E Loss (ft)	0.00	0.08
BR Sluice Coef		Shear Total (lb/sq ft)	0.13	0.13
BR Sel Method	Energy only	Power Total (lb/ft s)	0.54	0.54

Appendix E – Proposed Conditions Analysis

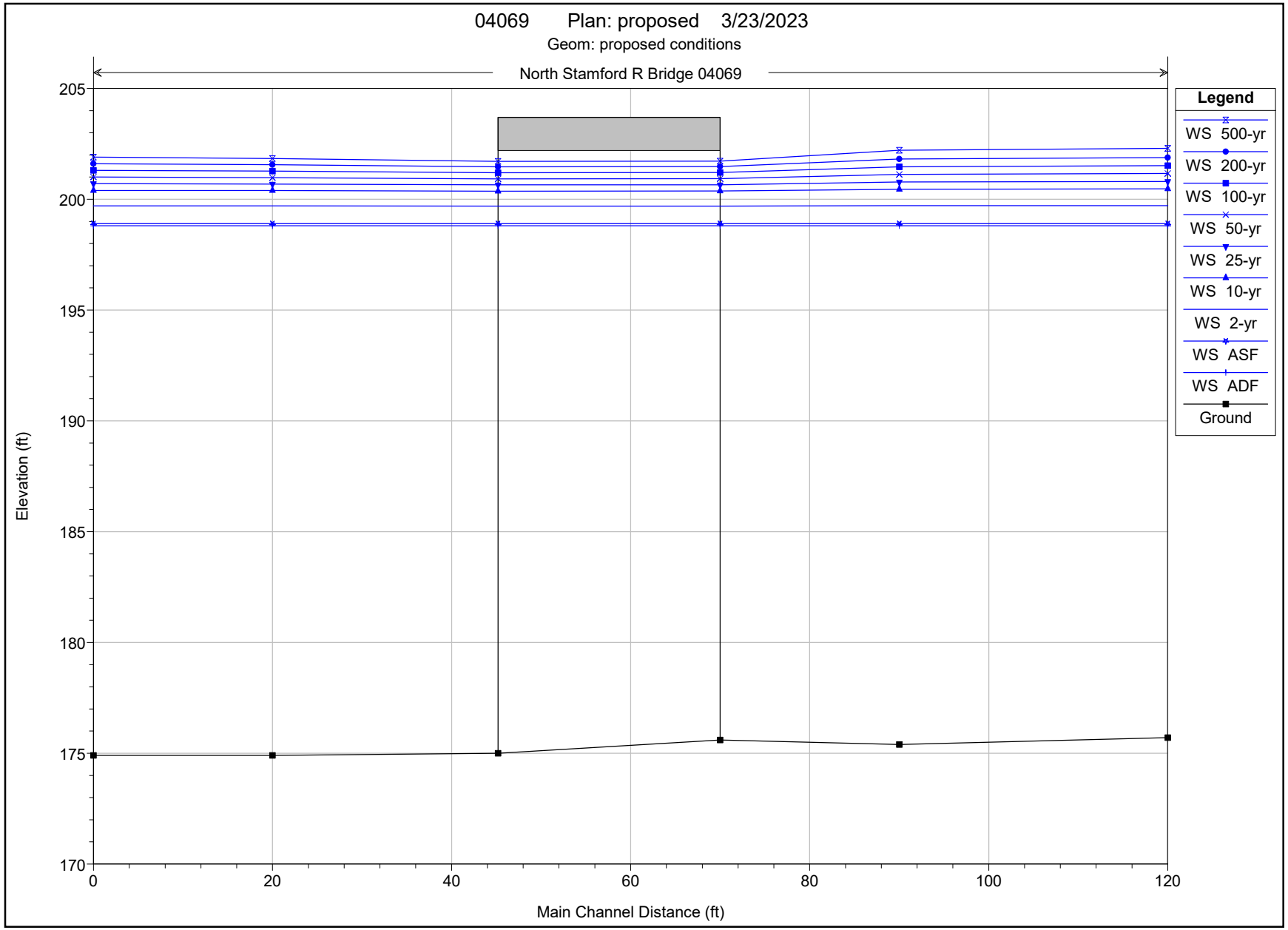
04069 Plan: proposed 3/23/2023
Geom: proposed conditions
North Stamford R Bridge 04069
Legend
WS 500-yr
WS 200-yr
WS 100-yr
WS 50-yr
WS 25-yr
WS 10-yr
WS 2-yr
WS ASF
WS ADF
Ground
Elevation (ft)
205
200
195
190
185
180
175
170
0
20
40
60
80
100
120
Main Channel Distance (ft)

HEC-RAS Plan: proposed River: North Stamford R Reach: Bridge 04069

Reach	River Sta	Profile	Q Total	Min Ch El	W.S. Elev	Crit W.S.	E.G. Elev	E.G. Slope	Vel Chnl	Flow Area	Top Width	Froude # Chl
			(cfs)	(ft)	(ft)	(ft)	(ft)	(ft/ft)	(ft/s)	(sq ft)	(ft)	
Bridge 04069	4	2-yr	900.00	175.70	199.71	178.12	199.72	0.000001	0.35	2549.43	656.62	0.01
Bridge 04069	4	10-yr	1960.00	175.70	200.47	179.32	200.48	0.000002	0.74	2636.54	665.13	0.03
Bridge 04069	4	25-yr	2440.00	175.70	200.80	179.77	200.81	0.000004	0.91	2675.21	668.90	0.03
Bridge 04069	4	50-yr	3130.00	175.70	201.16	180.37	201.18	0.000006	1.15	2716.86	672.97	0.04
Bridge 04069	4	100-yr	3690.00	175.70	201.51	180.86	201.54	0.000007	1.34	2758.01	676.98	0.05
Bridge 04069	4	200-yr	4295.00	175.70	201.88	181.22	201.92	0.000010	1.53	2800.52	681.13	0.06
Bridge 04069	4	500-yr	5160.00	175.70	202.29	181.67	202.35	0.000013	1.81	2848.41	685.81	0.06
Bridge 04069	4	ADF	38.00	175.70	198.80	176.18	198.80	0.000000	0.02	2443.40	642.95	0.00
Bridge 04069	4	ASF	73.00	175.70	198.90	176.38	198.90	0.000000	0.03	2454.99	645.90	0.00
Bridge 04069	3	2-yr	900.00	175.40	199.71	178.30	199.72	0.000001	0.53	1702.77	601.11	0.02
Bridge 04069	3	10-yr	1960.00	175.40	200.45	179.75	200.47	0.000005	1.11	1759.00	616.00	0.04
Bridge 04069	3	25-yr	2440.00	175.40	200.78	180.27	200.81	0.000008	1.37	1783.78	622.57	0.05
Bridge 04069	3	50-yr	3130.00	175.40	201.13	181.03	201.17	0.000013	1.73	1810.09	629.54	0.06
Bridge 04069	3	100-yr	3690.00	175.40	201.47	181.47	201.53	0.000017	2.01	1836.13	636.44	0.07
Bridge 04069	3	200-yr	4295.00	175.40	201.82	181.91	201.90	0.000022	2.31	1862.87	643.52	0.08
Bridge 04069	3	500-yr	5160.00	175.40	202.21	182.52	202.33	0.000029	2.73	1892.40	651.34	0.10
Bridge 04069	3	ADF	38.00	175.40	198.80	175.99	198.80	0.000000	0.02	1633.57	582.07	0.00
Bridge 04069	3	ASF	73.00	175.40	198.90	176.22	198.90	0.000000	0.04	1641.17	584.44	0.00
Bridge 04069	2.5		Bridge									
Bridge 04069	2	2-yr	900.00	174.90	199.70	179.41	199.71	0.000003	0.72	1244.94	409.70	0.03
Bridge 04069	2	10-yr	1960.00	174.90	200.39	181.77	200.43	0.000012	1.52	1287.25	427.85	0.06
Bridge 04069	2	25-yr	2440.00	174.90	200.69	182.37	200.74	0.000018	1.87	1305.29	435.58	0.07
Bridge 04069	2	50-yr	3130.00	174.90	200.98	183.17	201.06	0.000028	2.37	1323.09	443.22	0.09
Bridge 04069	2	100-yr	3690.00	174.90	201.27	183.77	201.39	0.000038	2.75	1340.92	450.87	0.10
Bridge 04069	2	200-yr	4295.00	174.90	201.56	184.37	201.71	0.000049	3.16	1358.64	458.47	0.12
Bridge 04069	2	500-yr	5160.00	174.90	201.84	185.19	202.06	0.000068	3.75	1375.94	465.89	0.14
Bridge 04069	2	ADF	38.00	174.90	198.80	176.05	198.80	0.000000	0.03	1190.08	386.17	0.00
Bridge 04069	2	ASF	73.00	174.90	198.90	176.39	198.90	0.000000	0.06	1196.19	388.79	0.00
Bridge 04069	1	2-yr	900.00	174.90	199.70	177.87	199.70	0.000001	0.49	1847.63	520.56	0.02
Bridge 04069	1	10-yr	1960.00	174.90	200.40	179.13	200.42	0.000005	1.03	1904.40	531.66	0.04
Bridge 04069	1	25-yr	2440.00	174.90	200.70	179.61	200.72	0.000007	1.27	1928.73	536.42	0.05
Bridge 04069	1	50-yr	3130.00	174.90	201.00	180.24	201.04	0.000011	1.60	1953.06	541.17	0.06
Bridge 04069	1	100-yr	3690.00	174.90	201.30	180.70	201.35	0.000014	1.87	1977.39	545.93	0.07
Bridge 04069	1	200-yr	4295.00	174.90	201.60	181.20	201.67	0.000018	2.15	2001.72	550.69	0.08
Bridge 04069	1	500-yr	5160.00	174.90	201.90	181.85	202.00	0.000026	2.55	2026.05	555.44	0.09
Bridge 04069	1	ADF	38.00	174.90	198.80	175.69	198.80	0.000000	0.02	1774.64	506.29	0.00

HEC-RAS Plan: proposed River: North Stamford R Reach: Bridge 04069 (Continued)

Reach	River Sta	Profile	Q Total	Min Ch El	W.S. Elev	Crit W.S.	E.G. Elev	E.G. Slope	Vel Chnl	Flow Area	Top Width	Froude # Chl
			(cfs)	(ft)	(ft)	(ft)	(ft)	(ft/ft)	(ft/s)	(sq ft)	(ft)	
Bridge 04069	1	ASF	73.00	174.90	198.90	175.91	198.90	0.000000	0.04	1782.75	507.87	0.00

Plan: proposed North Stamford R Bridge 04069 RS: 2.5 Profile: 10-yr

E.G. US. (ft)	200.47	Element	Inside BR US	Inside BR DS
W.S. US. (ft)	200.45	E.G. Elev (ft)	200.45	200.45
Q Total (cfs)	1960.00	W.S. Elev (ft)	200.37	200.37
Q Bridge (cfs)	1960.00	Crit W.S. (ft)	181.36	181.31
Q Weir (cfs)		Max Chl Dpth (ft)	24.77	25.37
Weir Sta Lft (ft)		Vel Total (ft/s)	2.31	2.31
Weir Sta Rgt (ft)		Flow Area (sq ft)	847.77	849.72
Weir Submerg		Froude # Chl	0.09	0.09
Weir Max Depth (ft)		Specif Force (cu ft)	10093.56	10153.80
Min El Weir Flow (ft)	203.71	Hydr Depth (ft)	18.98	19.02
Min El Prs (ft)	202.20	W.P. Total (ft)	90.24	88.99
Delta EG (ft)	0.05	Conv. Total (cfs)	224351.5	227315.9
Delta WS (ft)	0.06	Top Width (ft)	44.68	44.67
BR Open Area (sq ft)	946.44	Frctn Loss (ft)	0.00	0.00
BR Open Vel (ft/s)	2.31	C & E Loss (ft)	0.00	0.02
BR Sluice Coef		Shear Total (lb/sq ft)	0.04	0.04
BR Sel Method	Energy only	Power Total (lb/ft s)	0.10	0.10

Plan: proposed North Stamford R Bridge 04069 RS: 2.5 Profile: 100-yr

E.G. US. (ft)	201.53	Element	Inside BR US	Inside BR DS
W.S. US. (ft)	201.47	E.G. Elev (ft)	201.47	201.46
Q Total (cfs)	3690.00	W.S. Elev (ft)	201.20	201.20
Q Bridge (cfs)	3690.00	Crit W.S. (ft)	183.74	183.68
Q Weir (cfs)		Max Chl Dpth (ft)	25.60	26.20
Weir Sta Lft (ft)		Vel Total (ft/s)	4.14	4.14
Weir Sta Rgt (ft)		Flow Area (sq ft)	890.39	892.09
Weir Submerg		Froude # Chl	0.18	0.18
Weir Max Depth (ft)		Specif Force (cu ft)	11151.69	11209.14
Min El Weir Flow (ft)	203.71	Hydr Depth (ft)	16.58	16.62
Min El Prs (ft)	202.20	W.P. Total (ft)	100.19	98.92
Delta EG (ft)	0.15	Conv. Total (cfs)	227065.2	229723.5
Delta WS (ft)	0.20	Top Width (ft)	53.71	53.69
BR Open Area (sq ft)	946.44	Frctn Loss (ft)	0.01	0.00
BR Open Vel (ft/s)	4.14	C & E Loss (ft)	0.00	0.07
BR Sluice Coef		Shear Total (lb/sq ft)	0.15	0.15
BR Sel Method	Energy only	Power Total (lb/ft s)	0.61	0.60

```
HEC-RAS HEC-RAS 6.3.1 September 2022
U.S. Army Corps of Engineers
Hydrologic Engineering Center
609 Second Street
Davis, California

X     X  XXXXXX    XXXX        XXXX       XX      XXXX
X     X  X        X    X       X   X     X  X    X
X     X  X        X            X   X    X    X   X
XXXXXXX  XXXX     X       XXX  XXXX     XXXXXX    XXXX
X     X  X        X            X  X     X    X        X
X     X  X        X    X       X   X    X    X        X
X     X  XXXXXX    XXXX        X    X   X    X   XXXXX
```

PROJECT DATA
Project Title: 04069
Project File : 04069.prj
Run Date and Time: 3/23/2023 11:55:23 AM

Project in English units

PLAN DATA

Plan Title: proposed
Plan File : r:\Liaison\Federal Local Bridge Program\1. Project Files\04069, SPN 135-343, List R\6. Permits\b. Final Hydraulic Report\HEC-RAS 04069\04069.p03

Geometry Title: proposed conditions
Geometry File : r:\Liaison\Federal Local Bridge Program\1. Project Files\04069, SPN 135-343, List R\6. Permits\b. Final Hydraulic Report\HEC-RAS 04069\04069.g03

Flow Title : Design flow/elev.
Flow File : r:\Liaison\Federal Local Bridge Program\1. Project Files\04069, SPN 135-343, List R\6. Permits\b. Final Hydraulic Report\HEC-RAS 04069\04069.f01

Plan Description:
For use moving forward

Plan Summary Information:

Number of:	Cross Sections =	4	Multiple Openings =	0
	Culverts =	0	Inline Structures =	0
	Bridges =	1	Lateral Structures =	0

Computational Information
    Water surface calculation tolerance = 0.01
    Critical depth calculation tolerance = 0.01
    Maximum number of iterations = 20
    Maximum difference tolerance = 0.3
    Flow tolerance factor = 0.001

Computation Options
    Critical depth computed only where necessary
    Conveyance Calculation Method: At breaks in n values only
    Friction Slope Method: Average Conveyance
    Computational Flow Regime: Subcritical Flow

FLOW DATA

Flow Title: Design flow/elev.
Flow File : r:\Liaison\Federal Local Bridge Program\1. Project Files\04069, SPN 135-343, List R\6. Permits\b. Final Hydraulic Report\HEC-RAS 04069\04069.f01

Flow Data (cfs)

River	Reach	RS	2-yr	10-yr	25-yr	50-yr	100-yr	200-yr	500-yr	ADF
North Stamford	RBridge 04069	4	900	1960	2440	3130	3690	4295	5160	38

River	Reach	RS	ASF
North Stamford	RBridge 04069	4	73

Boundary Conditions

River	Reach	Profile	Upstream	Downstream
North Stamford	RBridge 04069	2-yr		Known WS = 199.7
North Stamford	RBridge 04069	10-yr		Known WS = 200.4
North Stamford	RBridge 04069	25-yr		Known WS = 200.7
North Stamford	RBridge 04069	50-yr		Known WS = 201
North Stamford	RBridge 04069	100-yr		Known WS = 201.3
North Stamford	RBridge 04069	200-yr		Known WS = 201.6
North Stamford	RBridge 04069	500-yr		Known WS = 201.9
North Stamford	RBridge 04069	ADF		Known WS = 198.8
North Stamford	RBridge 04069	ASF		Known WS = 198.9

GEOMETRY DATA

Geometry Title: proposed conditions
Geometry File : r:\Liaison\Federal Local Bridge Program\1. Project Files\04069, SPN 135-343, List R\6. Permits\b. Final Hydraulic Report\HEC-RAS 04069\04069.g03

CROSS SECTION

RIVER: North Stamford R
REACH: Bridge 04069 RS: 4

INPUT
Description: Approach
Station Elevation Data num= 14

Sta	Elev	Sta	Elev	Sta	Elev	Sta	Elev	Sta	Elev
-12.95	208	29.25	206	72.55	199	541.45	180.2	551.45	178.8
561.45	176.4	571.45	175.7	581.45	175.8	591.45	175.7	601.45	176.7
611.45	176.9	621.45	176.9	723.65	199.5	772.35	209		

Manning's n Values num= 3

Sta	n Val	Sta	n Val	Sta	n Val
-12.95	.08	72.55	.025	723.65	.08

Bank Sta: Left	Right	Lengths: Left	Channel	Right	Coeff Contr.	Expan.
72.55	723.65	30	30	30	.3	.5

Ineffective Flow num= 2

Sta L	Sta R	Elev	Permanent
-12.95	523.5	203.7	F
639.4	772.35	203.8	F

CROSS SECTION

RIVER: North Stamford R
REACH: Bridge 04069 RS: 3

INPUT
Description: US bounding
Station Elevation Data num= 14

Sta	Elev	Sta	Elev	Sta	Elev	Sta	Elev	Sta	Elev
-31.45	208	34.45	206	131.95	199	341.45	187.6	551.45	180.6
561.45	178.1	571.45	176.1	581.45	175.4	591.45	175.4	601.45	176.2
611.45	177	621.45	180.6	718.75	199	774.35	208		

Manning's n Values num= 3

Sta	n Val	Sta	n Val	Sta	n Val
-31.45	.08	131.95	.025	718.75	.08

Bank Sta: Left	Right	Lengths: Left	Channel	Right	Coeff Contr.	Expan.
131.95	718.75	70	70	70	.3	.5

```
Ineffective Flow     num=       2
   Sta L   Sta R    Elev  Permanent
  -31.45   543.5   203.7       F
   619.4  774.35   203.8       F

BRIDGE


RIVER: North Stamford R
REACH: Bridge 04069       RS: 2.5

INPUT
Description:
Distance from Upstream XS =      20
Deck/Roadway Width        =    24.8
Weir Coefficient          =     2.6
Upstream  Deck/Roadway Coordinates
    num=      19
     Sta Hi Cord Lo Cord     Sta Hi Cord Lo Cord     Sta Hi Cord Lo Cord
       0     207           157.9     206           268.2     205
   287.6   204.5           338.7   204.1           392.7   203.8
   429.2   203.7           450.1   203.7           529.1     205
   543.4   205.5           552.1   205.6           552.1   205.6   202.2
   581.1     206   202.2   609.4   205.7   202.2   609.4   205.7
   618.4   205.5           627.1   205.2           708.9   203.9
   748.3   203.8

Upstream Bridge Cross Section Data
Station Elevation Data    num=      13
     Sta    Elev     Sta    Elev     Sta    Elev     Sta    Elev     Sta    Elev
  -31.45     208   34.45     206  131.95     199  341.45   187.6  551.45   180.6
  561.45   179.2  571.45   177.2  581.45   175.6  591.45   176.6  601.45     178
  621.45   180.6  718.75     199  774.35     208

Manning's n Values        num=       3
     Sta   n Val     Sta   n Val     Sta   n Val
  -31.45     .08  131.95    .025  718.75     .08

Bank Sta: Left   Right    Coeff Contr.   Expan.
        131.95  718.75             .3       .5
Ineffective Flow     num=       2
   Sta L   Sta R    Elev  Permanent
  -31.45   543.5   203.7       F
   619.4  774.35   203.8       F

Downstream  Deck/Roadway Coordinates
    num=      19
     Sta Hi Cord Lo Cord     Sta Hi Cord Lo Cord     Sta Hi Cord Lo Cord
       0     207           157.9     206           268.2     205
   287.6   204.5           338.7   204.1           392.7   203.8
   429.2   203.7           450.1   203.7           529.1     205
```

```
   543.4   205.5           552.1   205.6           552.1   205.6   202.2
   581.1     206   202.2   609.4   205.7   202.2   609.4   205.7
   618.4   205.5           627.1   205.2           708.9   203.9
   748.3   203.8

Downstream Bridge Cross Section Data
Station Elevation Data    num=      12
     Sta    Elev     Sta    Elev     Sta    Elev     Sta    Elev     Sta    Elev
 -108.65     208   92.95     206  144.95     205  272.55     198  561.45     180
  571.45   176.4  581.45     175  591.45     177  601.45   179.7  637.75     198
  677.65     203  697.25     204

Manning's n Values        num=       3
     Sta   n Val     Sta   n Val     Sta   n Val
 -108.65     .08  272.55    .025  637.75     .08

Bank Sta: Left   Right    Coeff Contr.   Expan.
        272.55  637.75             .3       .5
Ineffective Flow     num=       2
   Sta L   Sta R    Elev  Permanent
 -108.65   550.9   203.7       F
     612  697.25   203.8       F

Upstream Embankment side slope              =       0 horiz. to 1.0 vertical
Downstream Embankment side slope            =       0 horiz. to 1.0 vertical
Maximum allowable submergence for weir flow =     .98
Elevation at which weir flow begins         =
Energy head used in spillway design         =
Spillway height used in design              =
Weir crest shape                            = Broad Crested

Number of Abutments =  2

Abutment Data
Upstream     num=       7
     Sta    Elev     Sta    Elev     Sta    Elev     Sta    Elev     Sta    Elev
   552.1   201.6   553.1   201.6   556.3     200   560.8     200   560.8   200.5
   563.5   200.5   563.5     175
Downstream     num=       7
     Sta    Elev     Sta    Elev     Sta    Elev     Sta    Elev     Sta    Elev
   552.1   201.6   553.1   201.6   556.3     200   560.8     200   560.8   200.5
   563.5   200.5   563.5     175

Abutment Data
Upstream     num=       7
     Sta    Elev     Sta    Elev     Sta    Elev     Sta    Elev     Sta    Elev
   599.4     175   599.4   200.5   602.4   200.5   602.4     200   605.2     200
   608.4   201.6   609.4   201.6
Downstream     num=       7
     Sta    Elev     Sta    Elev     Sta    Elev     Sta    Elev     Sta    Elev
   599.4     175   599.4   200.5   602.4   200.5   602.4     200   605.2     200
```

```
   608.4   201.6   609.4   201.6

Number of Bridge Coefficient Sets =  1

Low Flow Methods and Data
       Energy
Selected Low Flow Methods = Highest Energy Answer

High Flow Method
       Pressure and Weir flow
           Submerged Inlet Cd          =
           Submerged Inlet + Outlet Cd =      .8
           Max Low Cord                =

Additional Bridge Parameters
       Add Friction component to Momentum
       Do not add Weight component to Momentum
       Class B flow critical depth computations use critical depth
           inside the bridge at the upstream end
       Criteria to check for pressure flow = Upstream energy grade line

CROSS SECTION


RIVER: North Stamford R
REACH: Bridge 04069       RS: 2

INPUT
Description: DS Bounding
Station Elevation Data    num=      12
     Sta    Elev     Sta    Elev     Sta    Elev     Sta    Elev     Sta    Elev
 -108.65     208   92.95     206  144.95     205  272.55     198  561.45   181.1
  571.45   176.3  581.45   174.9  591.45   176.5  601.45   182.4  637.75     198
  677.65     203  697.25     204

Manning's n Values        num=       3
     Sta   n Val     Sta   n Val     Sta   n Val
 -108.65     .08  272.55    .025  637.75     .08

Bank Sta: Left   Right    Lengths: Left Channel   Right     Coeff Contr.   Expan.
        272.55  637.75               20      20      20             .3       .5
Ineffective Flow     num=       2
   Sta L   Sta R    Elev  Permanent
 -108.65   550.9   203.7       F
     612  697.25   203.8       F

CROSS SECTION


RIVER: North Stamford R
REACH: Bridge 04069       RS: 1
```

INPUT
Description: expanded
Station Elevation Data num= 12

Sta	Elev	Sta	Elev	Sta	Elev	Sta	Elev	Sta	Elev
-99.15	206	-40.65	206	106.85	206	179.95	198	561.45	176.2
571.45	175.5	581.45	175.3	591.45	174.9	601.45	176.7	673.55	198
707.15	203	726.95	204						

Manning's n Values num= 3

Sta	n Val	Sta	n Val	Sta	n Val
-99.15	.08	179.95	.025	673.55	.08

Bank Sta: Left	Right	Lengths: Left	Channel	Right	Coeff Contr.	Expan.
179.95	673.55	0	0	0	.1	.3

Ineffective Flow num= 2

Sta L	Sta R	Elev	Permanent
-99.15	540.9	203.7	F
622	726.95	203.8	F

SUMMARY OF MANNING'S N VALUES

River:North Stamford R

Reach	River Sta.	n1	n2	n3
Bridge 04069	4	.08	.025	.08
Bridge 04069	3	.08	.025	.08
Bridge 04069	2.5	Bridge		
Bridge 04069	2	.08	.025	.08
Bridge 04069	1	.08	.025	.08

SUMMARY OF REACH LENGTHS

River: North Stamford R

Reach	River Sta.	Left	Channel	Right
Bridge 04069	4	30	30	30
Bridge 04069	3	70	70	70
Bridge 04069	2.5	Bridge		
Bridge 04069	2	20	20	20
Bridge 04069	1	0	0	0

SUMMARY OF CONTRACTION AND EXPANSION COEFFICIENTS
River: North Stamford R

Reach	River Sta.	Contr.	Expan.
Bridge 04069	4	.3	.5
Bridge 04069	3	.3	.5
Bridge 04069	2.5 Bridge		
Bridge 04069	2	.3	.5
Bridge 04069	1	.1	.3

ERRORS WARNINGS AND NOTES
Errors Warnings and Notes for Plan : proposed

River: North Stamford R Reach: Bridge 04069 RS: 4 Profile: 100-yr
Warning:The conveyance ratio (upstream conveyance divided by downstream conveyance) is less than 0.7 or greater than 1.4. This may indicate the need for additional cross sections.
Note: Multiple critical depths were found at this location. The critical depth with the lowest, valid, energy was used.
River: North Stamford R Reach: Bridge 04069 RS: 3 Profile: 100-yr
Warning:The conveyance ratio (upstream conveyance divided by downstream conveyance) is less than 0.7 or greater than 1.4. This may indicate the need for additional cross sections.
Note: Multiple critical depths were found at this location. The critical depth with the lowest, valid, water surface was used.
River: North Stamford R Reach: Bridge 04069 RS: 2.5 Profile: 100-yr Upstream
Note: Multiple critical depths were found at this location. The critical depth with the lowest, valid, water surface was used.
River: North Stamford R Reach: Bridge 04069 RS: 2.5 Profile: 100-yr Downstream
Warning:The conveyance ratio (upstream conveyance divided by downstream conveyance) is less than 0.7 or greater than 1.4. This may indicate the need for additional cross sections.
Note: Multiple critical depths were found at this location. The critical depth with the lowest, valid, water surface was used.
River: North Stamford R Reach: Bridge 04069 RS: 2 Profile: 100-yr
Warning:The conveyance ratio (upstream conveyance divided by downstream conveyance) is less than 0.7 or greater than 1.4. This may indicate the need for additional cross sections.
Note: Multiple critical depths were found at this location. The critical depth with the lowest, valid, water surface was used.
River: North Stamford R Reach: Bridge 04069 RS: 1 Profile: 100-yr
Note: Multiple critical depths were found at this location. The critical depth with the lowest, valid, energy was used.

Appendix F – Cross Section Plots

04069 Plan: 1) existing 2) proposed

Geom: existing conditions

RS = 4 Approach

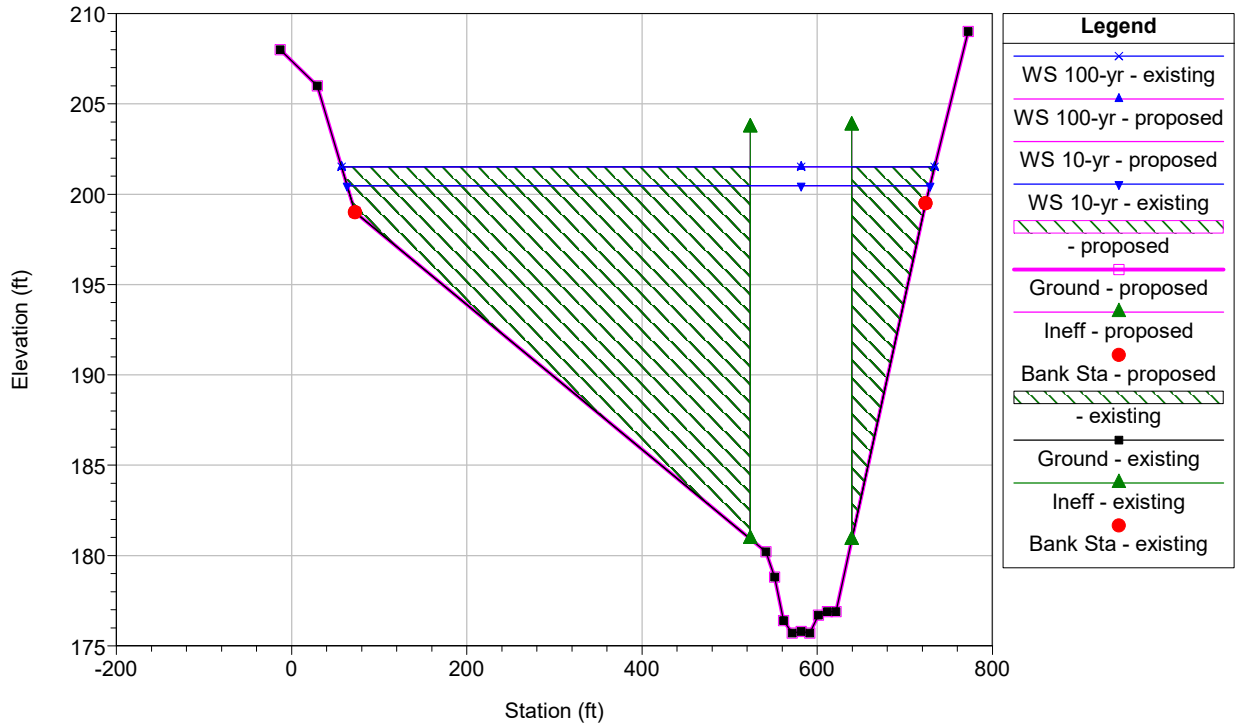

04069 Plan: 1) existing 2) proposed

Geom: existing conditions

RS = 3 US bounding

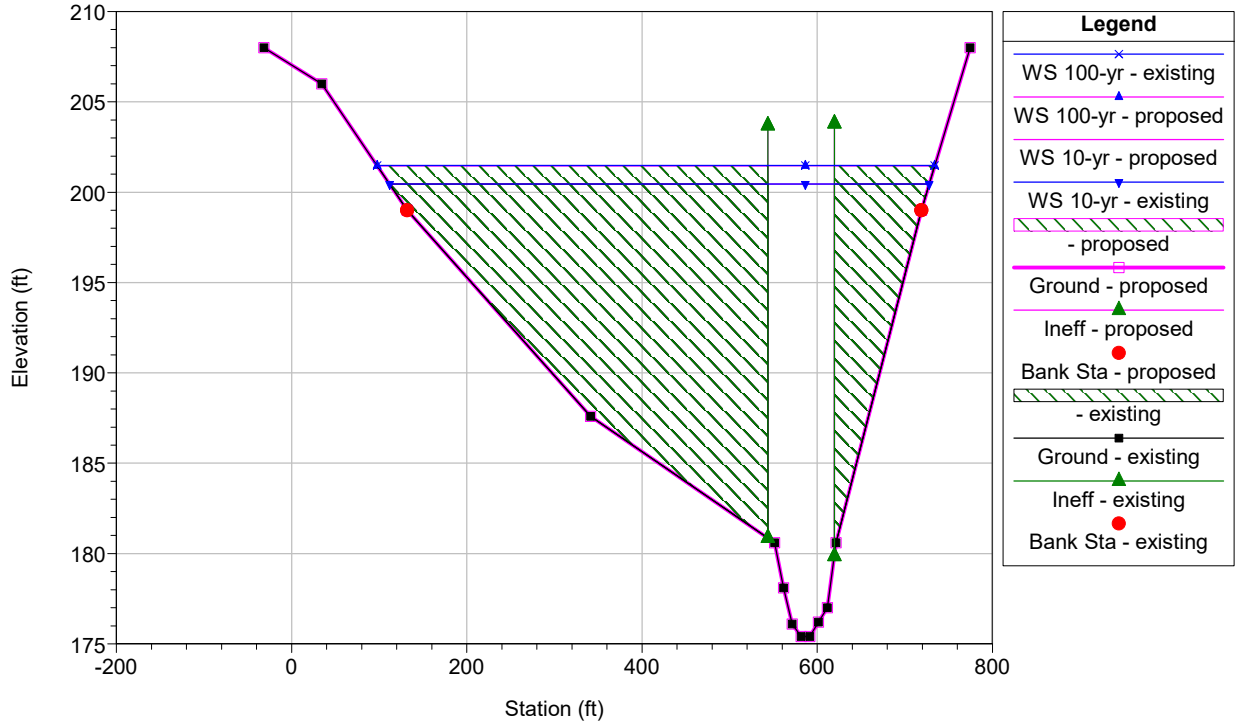

04069 Plan: 1) existing 2) proposed

Geom: existing conditions

RS = 2.5 BR

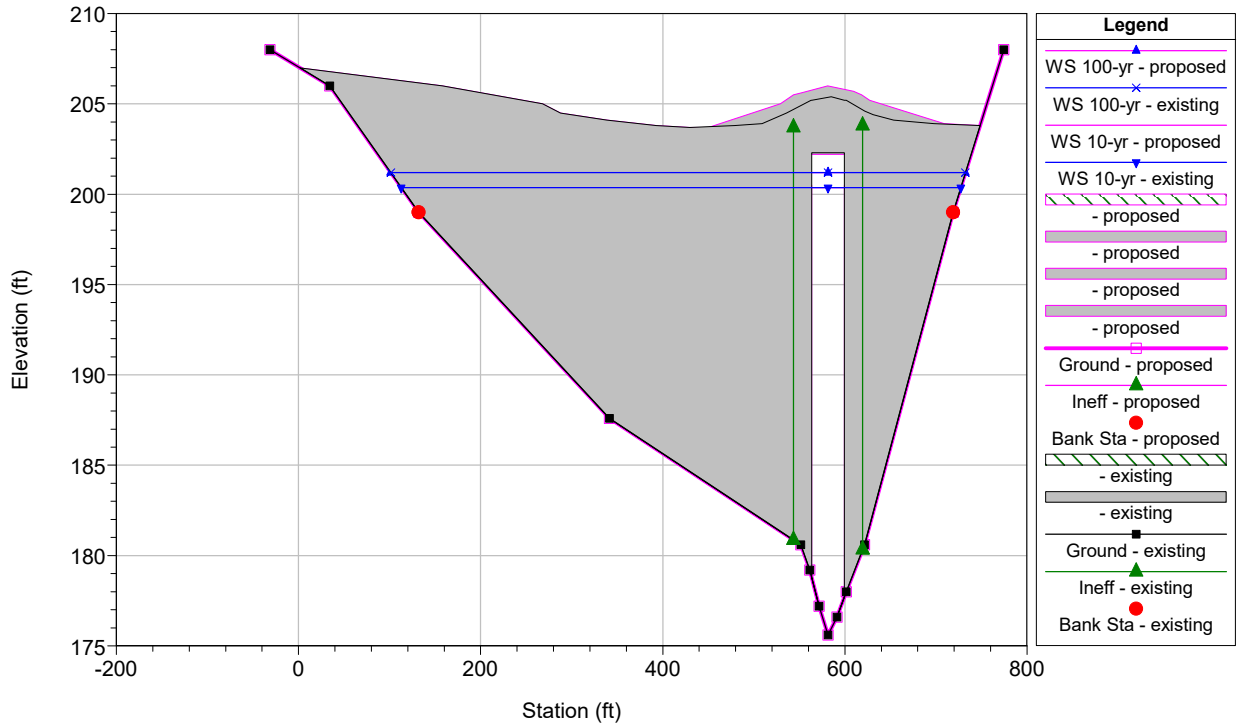

04069 Plan: 1) existing 2) proposed

Geom: existing conditions

RS = 2 DS Bounding

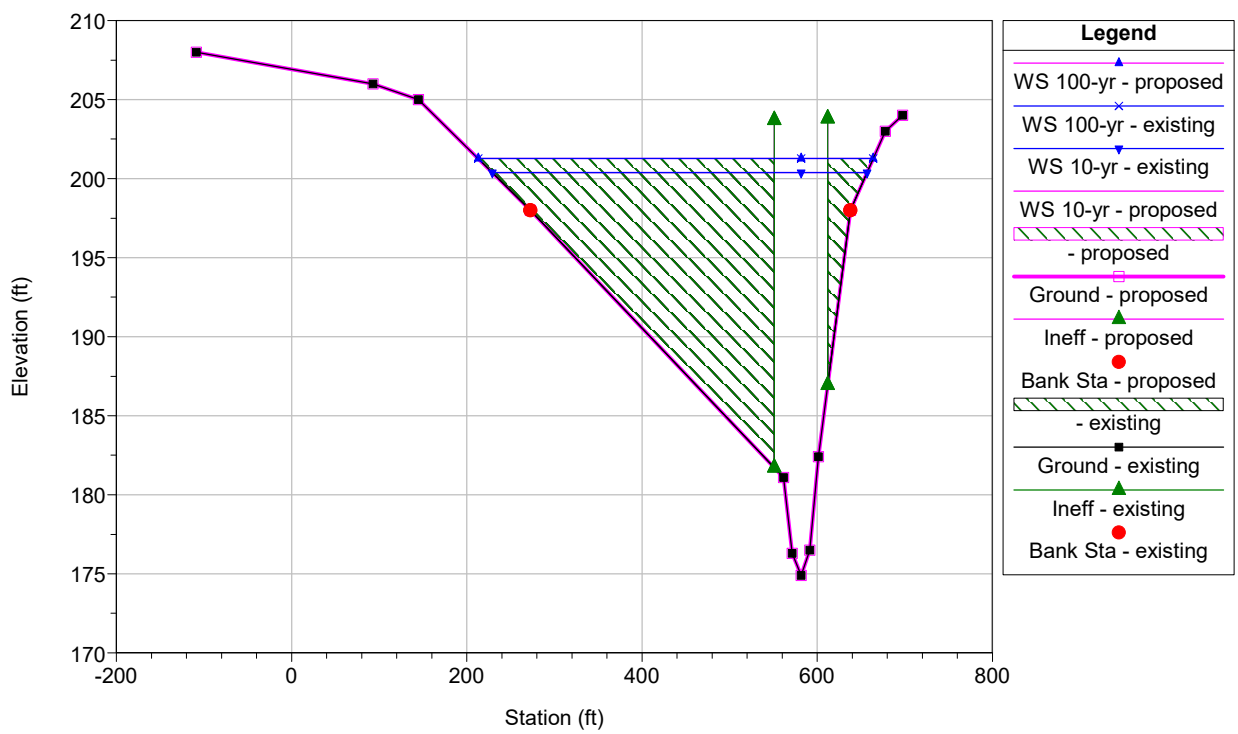

04069 Plan: 1) existing 2) proposed

Geom: existing conditions

RS = 1 expanded

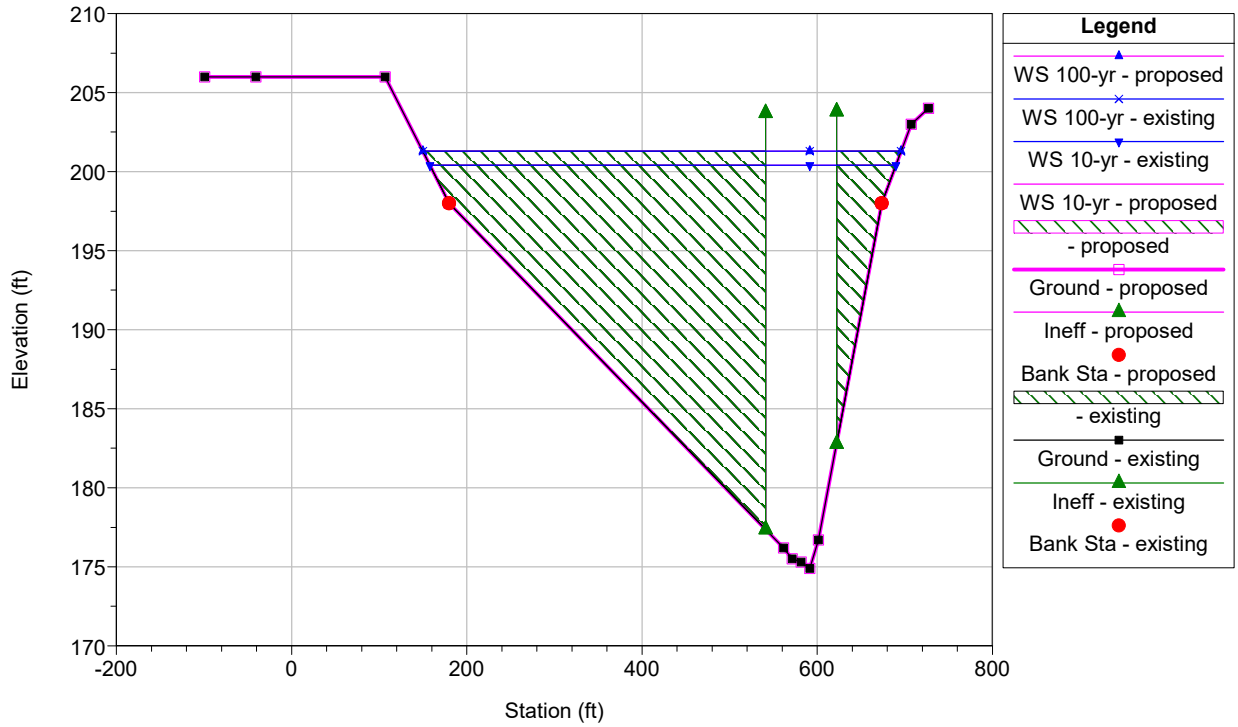

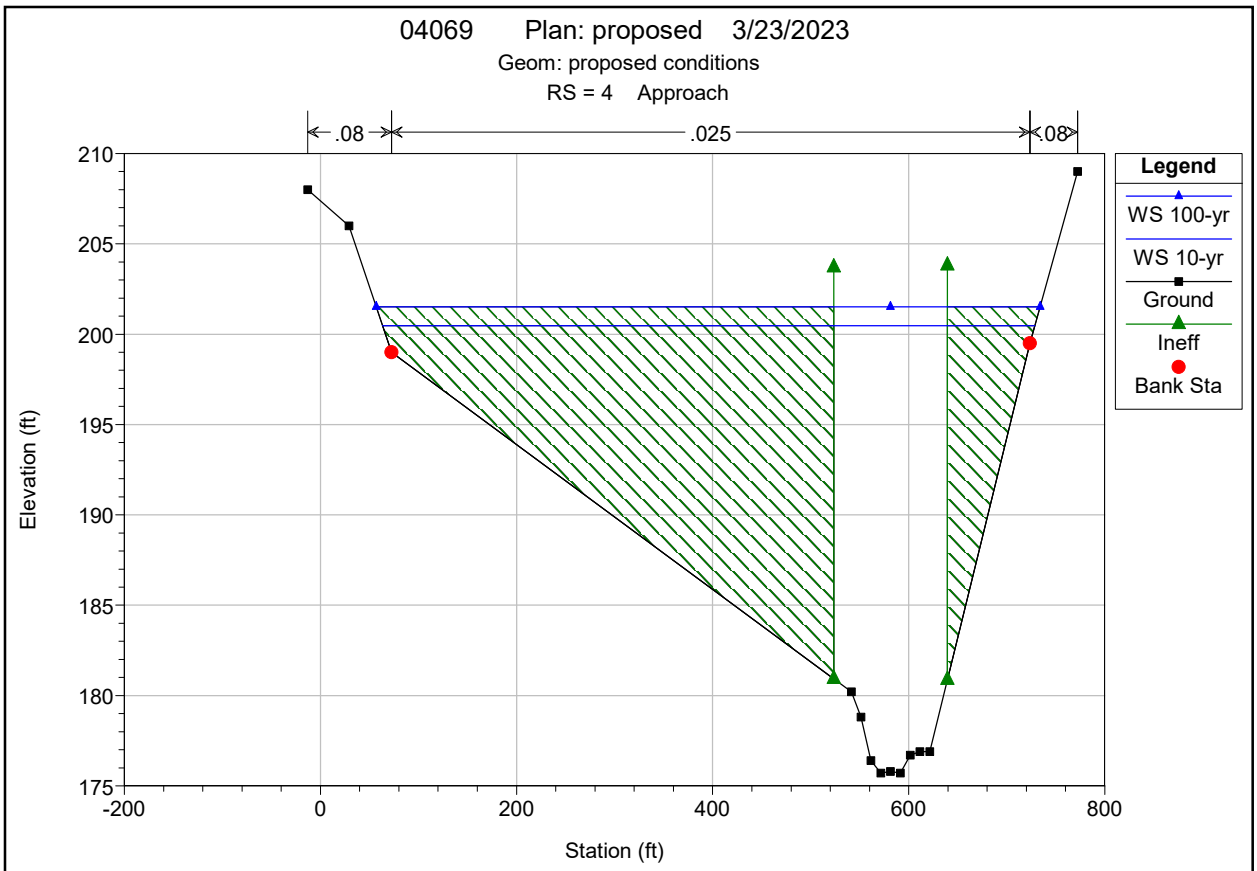
04069 Plan: proposed 3/23/2023
Geom: proposed conditions
RS = 4 Approach
.08
.025
.08
Legend
WS 100-yr
WS 10-yr
Ground
Ineff
Bank Sta
Elevation (ft)
Station (ft)
210
205
200
195
190
185
180
175
-200
0
200
400
600
800

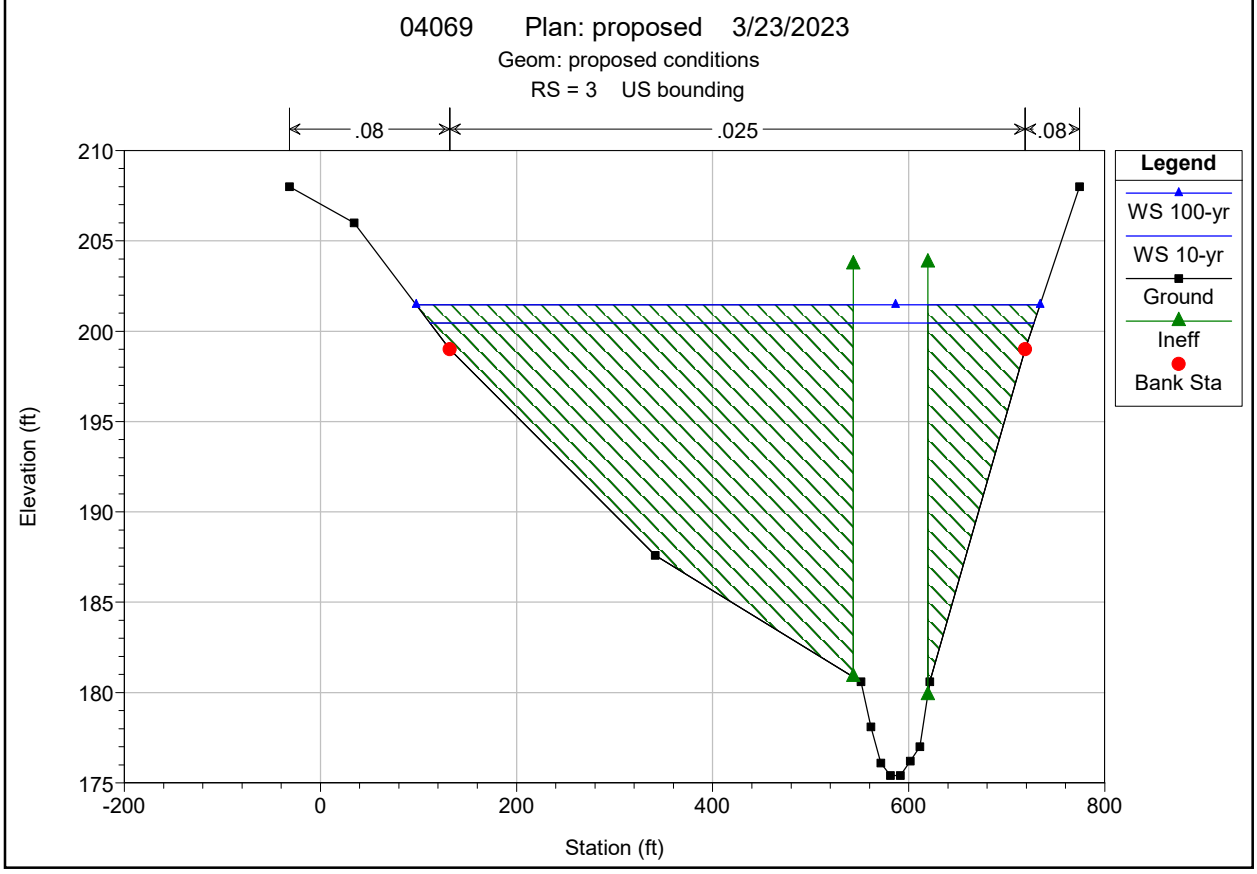
04069 Plan: proposed 3/23/2023
Geom: proposed conditions
RS = 3 US bounding
.08
.025
.08
Legend
WS 100-yr
WS 10-yr
Ground
Ineff
Bank Sta
Elevation (ft)
Station (ft)
210
205
200
195
190
185
180
175
-200
0
200
400
600
800

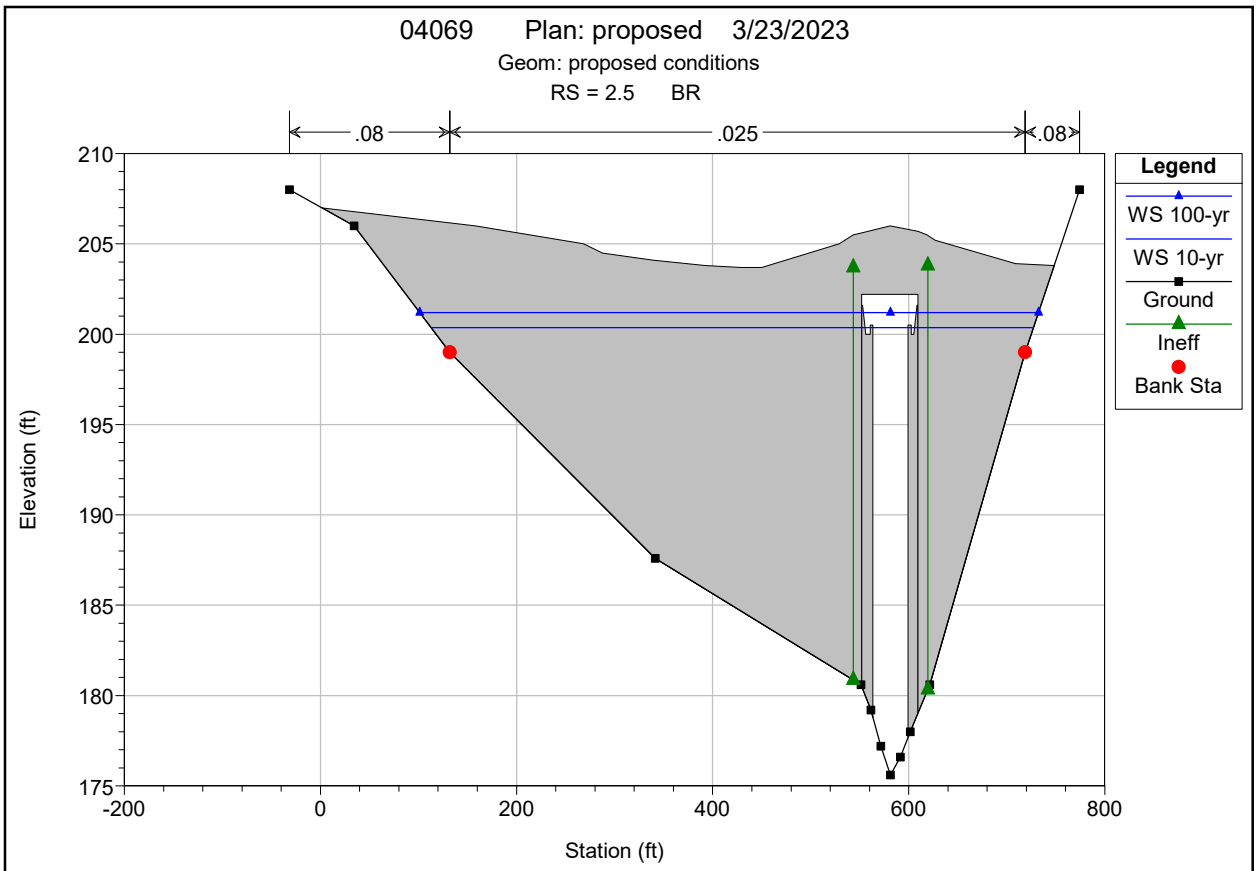
04069 Plan: proposed 3/23/2023
Geom: proposed conditions
RS = 2.5 BR
.08
.025
.08
Legend
WS 100-yr
WS 10-yr
Ground
Ineff
Bank Sta
Elevation (ft)
Station (ft)
210
205
200
195
190
185
180
175
-200
0
200
400
600
800

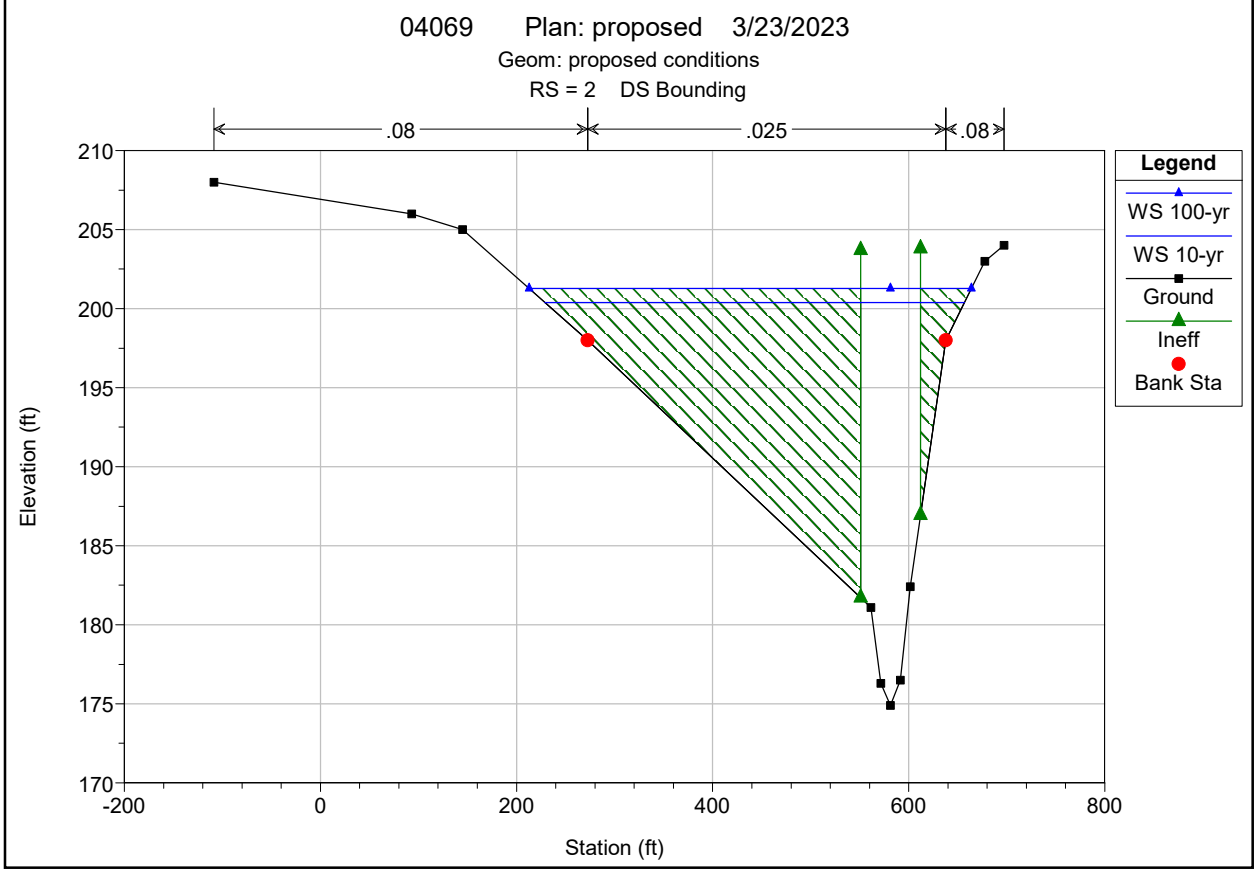
04069 Plan: proposed 3/23/2023
Geom: proposed conditions
RS = 2 DS Bounding
.08
.025
.08
Legend
WS 100-yr
WS 10-yr
Ground
Ineff
Bank Sta
Elevation (ft)
Station (ft)
210
205
200
195
190
185
180
175
170
-200
0
200
400
600
800

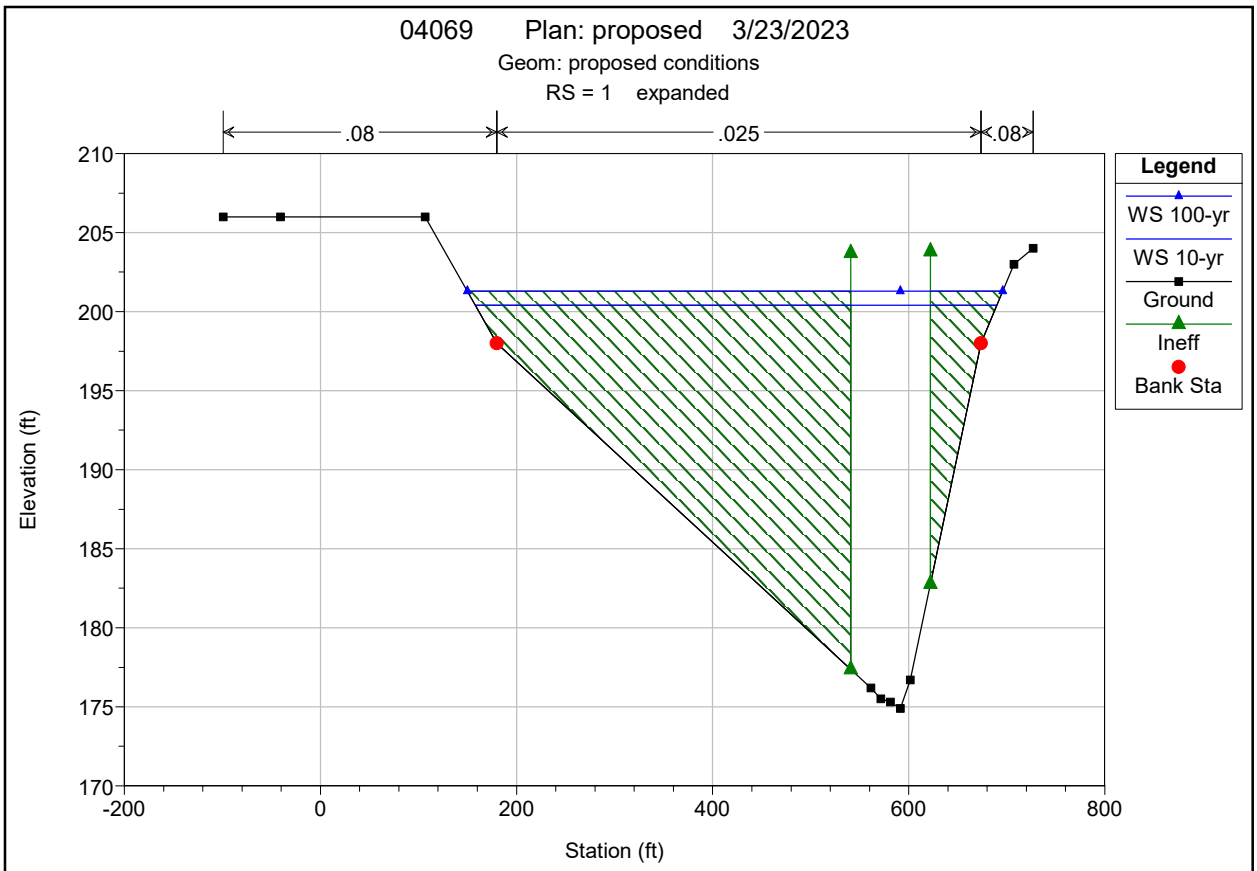
04069 Plan: proposed 3/23/2023
Geom: proposed conditions
RS = 1 expanded
.08
.025
.08
Legend
WS 100-yr
WS 10-yr
Ground
Ineff
Bank Sta
Elevation (ft)
Station (ft)
210
205
200
195
190
185
180
175
170
-200
0
200
400
600
800

Appendix G – CTDOT Inspection Report

Inspection Type: Routine

BRIDGE NO. 04069

73070 - STAMFORD

LAKESIDE DRIVE

over

NORTH STAMFORD RESERVOIR

Routine Inspection

6/16/2021

Inspected by: TranSystems

TABLE OF CONTENTS

Section	Page Number
Report Title Page	1
Location Map	2
Structure Inventory and Appraisal (BRI-19)	3
Inspection Data (BRI-18)	7
National Bridge Elements	13
Sketches	14
Pictures	29

Bridge No. 04069, Mill Street over North Stamford Reservoir, Stamford, CT

Inspected By: TranSystems Corporation Date: 06/16/2021

STATE OF CONNECTICUT
RICHARD C. VAN ALLEN
No. 16495
LICENSED
PROFESSIONAL ENGINEER

Professional Certification: I hereby certify that this report, including all of its contents, has been approved by me, and that I am a duly licensed professional engineer under the laws of the State of Connecticut.

Signature: Richard C. Van Allen

License No.: 16495 *Date:* 7-07-2021

Form: Location
Inspection type: Routine
Inspection Date: 6/16/2021
Inspected by: TranSystems

:Bridge No 04069

Town: STAMFORD
Carried: LAKESIDE DRIVE
Crossed: NORTH STAMFORD RESERVOIR
Inventory Route: Non-NHS

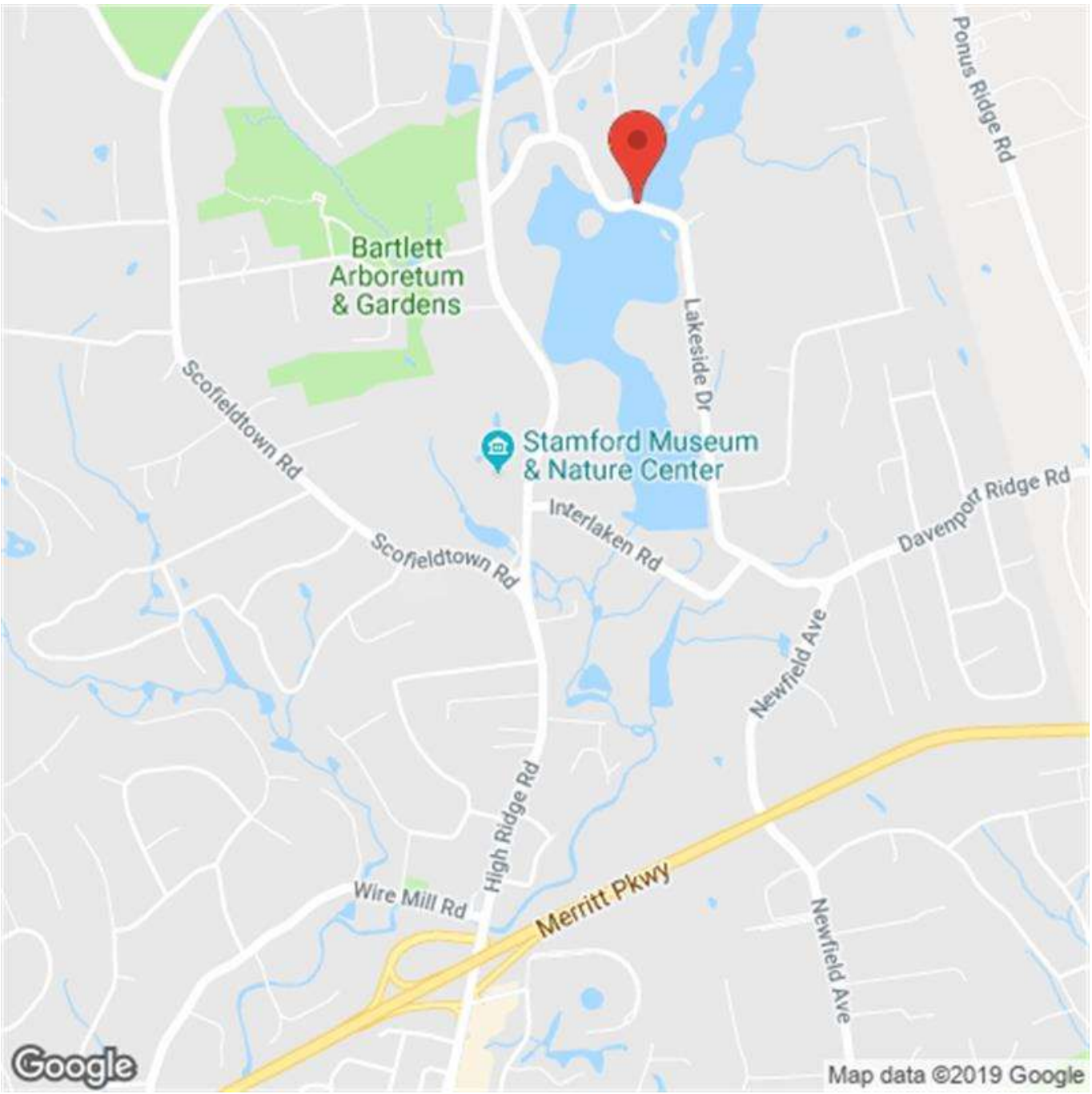

Location Map # 1

Form: BRI-19, Rev. 2/15
Inspection type: Routine
Inspection Date: 6/16/2021
Inspected by: TranSystems

:Bridge No 04069

Town: STAMFORD
Carried: LAKESIDE DRIVE
Crossed: NORTH STAMFORD RESERVOIR
Inventory Route: Non-NHS

STRUCTURE INVENTORY & APPRAISAL

INSPECTION

Structurally Deficient Y **Functionally Obsolete** N

Sufficiency Rating 30.9

(90) Inspection Date 06/16/2021 **(91) Frequency** 24

Indepth Insp No **Proposed next Indepth Year**

Deck Survey Date 1/1/1900 **Class** 01

Access 0 - None **Flagman** 0

	Frequency	Date	Type
Fracture			
Underwater	48		B Underwater Only
Special			

IDENTIFICATION

Bridge Name 04069

Town Code - Name 73070 - STAMFORD

(5) Inventory Route

(A) Record Type 1: Route carried "on" the structure

(B) Signing Prefix 5 - CITY STREET

(C) Level of Service 0 - NONE OF THE BELOW

(D) Route Number. 00000

(E) Dir Suffix 0 - NOT APPLICABLE

(6A) Featured Intersected NORTH STAMFORD RESERVOIR

(6B) Critical Facility Indicator

(7) Facility Carried LAKESIDE DRIVE

(9) Location OPP RT 137, N OF ROUTE 15

(11) Mile Post 0 Miles

(16) Latitude 41 Deg. 8 Min. 3.91 Sec.

(17) Longitude -73 Deg. 32 Min. 24.42 Sec.

(98) Border Bridge

(A) State Code (B) Percent Responsibility %

(C) Border Town Name

(99) Border Bridge Structure No.

STRUCTURE TYPE & MATERIALS

(43) Structure Type, Main

A) Material 3 - Steel

B) Design Type 02 - Stringer/Multi-beam or Girder

(44) Structure Type, Approach

A) Material 0 - Other

B) Design Type 00 - Other

(45) Number of Spans, Main Unit 001

(46) Number of Approach Spans 0000

(107) Deck Structure Type 1 - Concrete Cast-in-Place

(108) Wearing Surface/Protection Systems

A) Type of Wearing Surface 6 - Bituminous

B) Type of Membrane 2 - Preformed Fabric

C) Type of Deck Protection 1 - Epoxy Coated Reinforcing

Substructure

A) Material 1 - STONE

B) Design Type 1 - FULL HEIGHT STEM

Paint

Type

Year

Comment

GEOMETRIC DATA

(48) Length of Maximum Span 36 ft.

(49) Structure Length 40 ft.

(50) Curb or Sidewalk Widths

A) Left 0 ft. 0 in. B) Right 0 ft. 0 in.

(51) Bridge Roadway Width Curb to Curb 23 ft. 3 in.

(52) Deck Width, Out to Out 24 ft. 10 in.

(32) Approach Roadway Width 18 ft.

Form: BRI-19, Rev. 2/15
Inspection type: Routine
Inspection Date: 6/16/2021
Inspected by: TranSystems

:Bridge No 04069

Town: STAMFORD
Carried: LAKESIDE DRIVE
Crossed: NORTH STAMFORD RESERVOIR
Inventory Route: Non-NHS

(33) Bridge Median: 0 - No median

Deck Area: 993 sq. ft.

(34) Skew Angle: 00 deg.

(35) Structure Flared: 0 - No flare

(10) Inv. Rte. Min. Vert. Clearance: 99 ft. 99 in.

(47) Inv. Rte. Total Horiz. Clr.: 23 ft. 3 in.

Log Inv. Rte. Total Horiz. Clr.: 23 ft. 3 in.

RLog Inv. Rte. Total Horiz. Clr.: 0 ft. 0 in.

(53) Min. Vert. Clearance Over Bridge: 0 ft. 0 in.

(54) Log-Min. Vert. Underclearance: N ref. 0 ft. 0 in.

(55) Min. Lat Underclearance on Right: N ref. 0 ft. 0 in.

(56) Min. Lat Underclearance on Left: 0 ft. 0 in.

AGE AND SERVICE

Year Built: 1936 (106) Year Reconstructed: 1993

(42) Type of Service

A) On: 1 - Highway

B) Under: 5 - Waterway

(28) Number of Lanes

A) On: 02 B) Under: 00

(29) Average Daily Traffic: 4700

Is Above Half ADT?: No

(109) Precent Truck: 4 %

(30) Years of ADT: 2017

(19) Bypass, Detour Length: 1 Miles

CONDITION

(58) Deck: 7

(59) Superstructure: 3

(60) Substructure: 6

(61) Channel & Channel Protections: 6

(62) Culverts: N

(36) Traffic Safety Features

A) Bridge Railings: 0

B) Transitions: 0

C) Approach Guardrail: 0

D) Approach Guardrail Ends: 1

APPRAISALS

(67) Structural Evaluation: 3

(68) Deck Geometry: 2

(69) Underclearances, Vert. & Horiz.: N

(71) Waterway Adequacy: 7

(72) Approach Roadway Alignment: 3

(113) Scour Critical: 8

COMMENTS

Item 29: ADT obtained from CTDOT Traffic Monitoring Station Viewer.

WATERWAY

Drainage Basin Waterway: 7405 - Rippowam River

(38) Navigation Control: 0 - No navigation control on waterway (bridge permit not required)

(39) Navigation Vertical Clearance: 0 ft.

(40) Navigation Horiz. Clr.: 0 ft.

(111) Pier/Abutment Navigation:

(116) Vert-Lift Brg Nav Min: 0 ft. 0 In.

CLASSIFICATION

(112) NBIS Bridge Length: Yes

(104) Highway System: 0 - Structure/Route is NOT on NHS

(26) Functional Class: 19 - Urban - Local

(100) Defense Highway: 0 - Not a STRAHNET route

(101) Parallel Structure: N - No parallel structure

(102) Direction of Traffic: 2 - 2-way traffic

Form: BRI-19, Rev. 2/15
Inspection type: Routine
Inspection Date: 6/16/2021
Inspected by: TranSystems

:Bridge No 04069

Town: STAMFORD
Carried: LAKESIDE DRIVE
Crossed: NORTH STAMFORD RESERVOIR
Inventory Route: Non-NHS

(103) Temporary Structure	
(110) Designated National Network	0 - Inventory route not on network
(20) Toll	3 - On Free Road
(21) Maintain	04 - City or Municipal Highway Agency
(22) Owner	04 - City or Municipal Highway Agency
Report Class	L - LOCAL
(37) Historical Significance	5 - Not eligible for National Register

POSTED SIGNS

Other Posted Sign 1	2 - Narrow bridge
Other Posted Sign 2	

	Actual	Recomended	
Posted Load Single Unit Truck			tons
Posted Load Semi-Trailer Truck			tons
Posted Load 4 Axle Truck			tons
Posted Load 3S2 Truck			tons
All Vehicles			tons
Posted Vert. Clearance on Bridge	ft.	in.	
Posted Vert. Underclearance	ft.	in.	
Posted Speed Limit on Bridge	m.p.h.		

OTHER FEATURES

Fence Required	Yes
Fence Present	Yes
Fence Type	2 - Chain Link
Fence Height	10.8
Fence Material	2 - Steel
Fence Top Type	1 - Vertical
Barrel Ladders	No
Stand Pipes	No
Catwalks	No
Moveable Inspection System	No
Haunches Present over Roadway	NO
Utilities	2 | Water

PROPOSED IMPROVEMENTS

(75A) Type of Work Proposed	31 - Replacement - Load/Geometry
(75B) Work Done By	1 - Work to be done by contract
(76) Length of Structure Improvement	ft.
(94) Bridge Improvement Cost	$
(95) Roadway Improvement Cost	$
(96) Total Project Cost	$ 1720
(97) Year of Improvement Estimate	2018
(114) Future ADT	6984
(115) Year of Future ADT	2037
DOT Bridge Program List No	FLBP
Project No	0135-0343
Advertised Date	11/10/2021

LOAD RATING & POSTING

(31) Design Load	5 - HS 20
(63) Operating Rating Type	1 - Load Factor (LF)
(64) Operating Rating	68.7
(65) Inventory Rating Type	1 - Load Factor (LF)
(66) Inventory Rating	41.4
Evaluation Code	L - Load Factor
Year of Evaluation	2011
(70) Bridge Posting	5 - Equal to or above legal loads
(41) Structure Status	A - Open

Form: BRI-19, Rev. 2/15
Inspection type: Routine
Inspection Date: 6/16/2021
Inspected by: TranSystems

:Bridge No 04069

Town: STAMFORD
Carried: LAKESIDE DRIVE
Crossed: NORTH STAMFORD RESERVOIR
Inventory Route: Non-NHS

INSPECTOR'S SIGNATURES:

1) Date: 06/25/2021

2) Date: 06/28/2021

3) Date:

4) Date:

P.E. SIGNATURE: Date: 07/07/2021

P.E. #

Reviewed By: Date: 08/30/2021

Carl DeLucia

Form: BRI-18, Rev. 1/14
Inspection type: Routine
Inspection Date: 6/16/2021
Inspected by: TranSystems

:Bridge No 04069

Town: STAMFORD
Carried: LAKESIDE DRIVE
Crossed: NORTH STAMFORD RESERVOIR
Inventory Route: Non-NHS

FIELD INSPECTION REPORT

Location:	OPP RT 137, N OF ROUTE 15	Year Built:	1936	Snooper Required:	☐
Main Material:	3 - Steel	Year Rebuilt	1993	Snooper Used:	☐
Main Design:	02 - Stringer/Multi-beam or				

Inspectors:

Lead Inspector:	Forrest Williams
Inspector:	Task:
Belamkar,Vishal	BSE - Inspector Rail - Inspector
Williams,Forrest	BSE - Inspector Rail - Inspector

Visits:

Visit Date:	Temp:	Start Time:	End Time:
06/16/2021	75	10:00 AM	03:00 PM

58. DECK:

Overall Rating: 7

	Rating	
Overlay:	7	Bituminous overlay has: - Light wheel marks and full width x 1/4" wide transverse cracks at both deck ends (photo 7). See Top of Deck sketch and photo 6.
Deck - Str. Condition:	7	Underside of deck, interior bays have galvanized stay-in-place (SIP) forms with no significant deficiencies noted. Deck overhangs have bare concrete with random transverse hairline cracks with efflorescence. See Underside of Deck and Framing sketch and photo 8.
Curbs:	7	Concrete rail bases have: - Random vertical and horizontal hairline cracks with efflorescence. - Random pop-outs, minor collision scrapes and light scaling throughout. Average curb reveals on both sides is 7-1/2". See Top of Deck sketch.
Median:	N	
Sidewalks:	N	
Parapet:	N	
Railing:	7	Metal bridge guide rail which is continuous across the bridge has: - Random collision scrapes with light rust. - North metal beam bridge guiderail has two (2) 3' long x 2" high x 1" deep areas of collision damage. See Top of Deck sketch.
Paint:	N	
Fence:	6	The chain link fence along the bridge railings have: - Light surface rust. - Chain link fence at the northeast corner bottom rail has 100% section loss (photo 9). - Chain link fence at the southeast corner bottom rail has a minor bend (photo 10). The northwest approach chain link fence has a 3' wide x 4' high hole in the mesh approximately 25' from the bridge (photo 11).

		See Top of Deck sketch.
Drains:	N	
Lighting Standard:	N	

Overall Utility Condition Rating: 6 - Fair

Utility Type/Size

2 | Water	Bay 2 has a 16" water main with moderate rust and wetness. South U-bolt is broken at the fifth support channel from abutment 1. See Underside of Deck and Framing sketch.

Construction Joints:	N	
Expansion Joint:	N	

Haunches Present over travelway? NO

APPROACH CONDITION:

Overall Rating: 7

Rating		
Approach Slab:	7	Not visible, rating is based on the condition of the approach pavement. See item "Approach Pavement" below.
Relief Joints:	N	
Approach Guide Rail:	6	Approach metal beam guiderails have: - Minor collision scrapes with light surface rust. - Northeast approach guiderail has a 30' long x 1' deep bent area of moderate collision damage with bent and an isolated tilted post at approximately 60' from the bridge (photo 12). - Southwest approach guiderail has a 4' long collision damage approximately 60' from the bridge. See Top of Deck sketch.
Approach Pavement:	7	Bituminous approach pavements have: - Light wheel marks. - East approach pavement has (2) transverse cracks up to 12' long x 1/8" wide. See Top of Deck sketch.
Approach Embankment:	7	Rip rap at all four corners, no deficiencies noted. The northwest approach embankment has a 3' diameter x 1' deep area of erosion adjacent to the curb approximately 25' from the bridge (photo 13). See Top of Deck sketch.
Trafic Safety Features		
Bridge Railings:	0	Doesn't meet current standards for Non-NHS bridges (open railing).
Transitions:	0	Not compliant to RB-350 standards (missing blockouts).
Approach Guardrails:	0	Not compliant to RB-350 standards (missing blockouts).
Approach Guardrail Ends:	1	Compliant to RB-350 standards (continuous).

59. SUPERSTRUCTURE:

Overall Rating: 3

	Rating	
Bearing Devices:	N	Not visible as girder ends have been encased in the backwalls. See Underside of Deck and Framing sketch.
Stringers:	N	
Girders:	3	- Girder 1 near mid-span has section loss up to 2'-2" long x full width x 5/16" remaining bottom flange thickness, resulting in 31.2% flexure loss (critical location) (photos 16 &17). - Girders near abutments have laminated rust with web section losses up to full height x 1/8" deep, resulting in 38.9% shear loss (girder 1 at abutment 1, critical location) (photos 14, 15 & 18). - Girders have moderate rust and bottom of interior bottom flanges have 1/16" deep pitting throughout. - There are heavy bird debris, bird nests and droppings on top of girder bottom flanges and diaphragms (photo 20). See Underside of Deck and Framing and Section Loss sketches and photo 8.
Floor Beams:	N	
Trusses - General:	N	
Trusses - Portals:	N	
Trusses - Bracing:	N	
Paint:	5	Areas of peeling paint mostly at girder ends and bottom flanges, up to 20% of total area. See Underside of Deck and Framing sketch and photo 8.
Rust:	3	See item "Girders" above.
Machinery Movable Span:	N	
Rivets & Bolts:	7	Diaphragm connection bolts have areas of peeling paint with light rust. See Underside of Deck and Framing Sketch and photo 19.
Welds - Cracks:	7	Diaphragm connection plate and utility support to web welds have areas of peeling paint with light rust. See Underside of Deck and Framing sketch and photo 19.
Timber Decay:	N	
Concrete Cracking:	N	
Collision Damage:	N	
Member Alignment:	7	Girder 6 south bottom flange near mid-span has 1/2" bend upward over 10" long (photo 20). See Underside of Deck and Framing sketch.
Deflection Under Load:	N	(N) Normal; (E) Excessive.
Vibration Under Load:	N	(N) Normal; (E) Excessive.
Stand Pipes:	N	
Catwalks:	N	
Movable Inspection System:	N	
Barrel Ladders:	N	

Are Barrel Ladders OSHA Compliant? NA

60. SUBSTRUCTURE:

Overall Rating: 6

	Rating	
Abutments - Stem:	6	Stone masonry stems have: - Cracked/deteriorated joint mortar up to 10% with areas of heavy efflorescence and rust stains along the mortar joints. - There are random voids between stones up to 6" deep near water level. See Abutment and Wingwalls sketch, 2020 Underwater Inspection Report and photo 21.
Abutments - Backwall:	6	Reinforced concrete backwalls have: - Random map cracks up to 1/8" wide with efflorescence. - There are spalls/voids up to full flange width x 1" high x 4" deep below girder bottom flanges. See Abutment and Wingwalls sketches and photo 22.
Abutments - Footings:	N	Not visible.
Abutments - Settlement:	8	None noted.
Abutments - Wingwalls:	5	Wingwalls have: - Spalls up to 3' wide x 18" high x 7" deep in the concrete cap (photo 23). - Stone masonry has cracked/deteriorated joint mortar up to 50% with loose stones and heavy efflorescence stains. - There are random voids between stones up to 4" wide x 7" high x 1' deep. See Abutment and Wingwalls sketch, 2020 Underwater Inspection Report and photos 23-24.
Piers/Bents - Caps:	N	
Piers/Bents - Pile Bent:	N	
Piers/Bents - Columns:	N	
Piers/Bents - Footings:	N	
Piers/Bents - Settlement:	N	
Erosion - Scour:	7	Erosion: Rated 8. Scour: Rated 7. Per the 2020 Underwater Inspection there is aggradation up to 0.4' at abutment 1 and up to 0.1' at abutment 2. There is degradation up to 0.1' at abutment 1 and up to 0.2' at abutment 2. See 2020 Underwater Inspection Report.
Concrete Crack - Spall:	6	See items "Abutments - Stem", "Abutments - Backwall" and "Abutments - Wingwalls" above.
Steel Corrosion:	N	
Paint:	N	
Timber Decay:	N	
Collision Damage:	N	
Debris:	8	

61. CHANNEL AND CHANNEL PROTECTION:

Overall Rating: 6

	Rating	
Channel - Scour:	6	Per the 2020 Underwater Inspection Report, there has been general degradation of the channel with a maximum of 2.8' and degradation up to 2.0' since 2016 inspection. See Channel Diagram sketch, 2020 Underwater Inspection Report and photos 25-26.
Embankment - Erosion:	8	
Debris:	7	Per the 2020 Underwater Inspection Report, there is moderate man-made debris along the mudline of both abutments. There is aggradation up to 0.4' at abutment 1 and up to 0.1' at abutment 2. There is degradation up to 0.1' at abutment 1 and up to 0.2' at abutment 2.

		See Channel Diagram sketch and 2020 Underwater Inspection Report.
Vegetation:	8	
Channel Change:	6	- There was moderate flow below the bridge with freeboard of 3'-5" at the time of inspection. - North side of the channel has a turbidity curtain extending 40' outwards from both abutments. See Channel Diagram sketch, 2020 Underwater Inspection Report and photos 25-26.
Fender - System:	N	
Spur Dikes and Jetties:	N	
Rip Rap:	8	Per the 2020 Underwater Inspection Report, there is 1' diameter rip rap at all wingwalls, no significant deficiencies. See Channel Diagram sketch and the 2020 Underwater Inspection Report.

62. CULVERTS AND RETAINING WALLS:

Overall Rating: N

	Rating	
Barrel:	N	
Concrete:	N	
Steel:	N	
Timber:	N	
Headwall:	N	
Cutoff Wall:	N	
Debris:	N	
Retaining Wall System:	N	
Footing:	N	

LOAD POSTING:

	Rating	
Single Unit (Tons):		
Semi Trailer (Tons):		
4 Axle (Tons):		
3S2 (Tons):		
All Vechicles:		
Advanced Warning:		
Warning At Bridge:		
Legibility:		
Visibility:		

VERTICAL CLEARANCE POSTING

Min. Vert Under Clearance:		Ft		In	
Posted Clearance Under Bridge:		Ft		In	
Posted Clearance On Bridge:		Ft		In	
Advanced Warning:					
Warning At Bridge:					
Legibility:					

Visibility:

NOTES / COMMENTS:

Character of Traffic: Light to moderate volume, mixed weights.

Additional Notes:

- Bridge ID at the east end of the north concrete rail base is clear and legible (photo 1).
- Bridge is logged from west to east with girder 1 at the north fascia, which is consistent with the previous inspection report.
- Bridge was inspected using a boat (freeboard dependent).
- Bridge access is only via a locked gate; call Mike at Aquarion Water Co. at 203-445-7310/7453 for access.

Additional Comments:

There are no In-Depth Tracking components associated with this bridge.

National Bridge Elements
Inspection type: Routine
Inspection Date: 6/16/2021
Inspected by: TranSystems

:Bridge No 04069

Town: STAMFORD
Carried: LAKESIDE DRIVE
Crossed: NORTH STAMFORD RESERVOIR
Inventory Route: Non-NHS

	Environment	Total Quantity	Units	Condition State 1	Condition State 2	Condition State 3	Condition State 4
12 - Reinforced Concrete Deck	Mod.	993	sq. ft.	977	16	0	0
1120 - Efflorescence/Rust Staining		8		0	8	0	0
1130 - Cracking (RC and Other)		8		0	8	0	0
510 - Wearing Surfaces		930	sq. ft.	928	2	0	0
3230 - Effectiveness (Wearing Surface)		2		0	2	0	0
107 - Steel Open Girder/Beam	Mod.	216	ft.	139	45	26	6
1000 - Corrosion		76		0	44	26	6
7000 - Damage		1		0	1	0	0
515 - Steel Protective Coating		1511	sq. ft.	1181	0	302	28
3440 - Effectiveness (Steel Protective Coatings)		330		0	0	302	28
217 - Masonry Abutment	Mod.	50	ft.	0	2	48	0
1120 - Efflorescence/Rust Staining		24		0	0	24	0
1610 - Mortar Breakdown (Masonry)		24		0	0	24	0
1620 - Split/Spall (Masonry)		2		0	2	0	0
330 - Metal Bridge Railing	Mod.	80	ft.	74	6	0	0
7000 - Damage		6		0	6	0	0
515 - Steel Protective Coating		82	sq. ft.	78	3	1	0
3440 - Effectiveness (Steel Protective Coatings)		4		0	3	1	0

Sketches
Inspection type: Routine
Inspection Date: 6/16/2021
Inspected by: TranSystems

:Bridge No 04069

Town: STAMFORD
Carried: LAKESIDE DRIVE
Crossed: NORTH STAMFORD RESERVOIR
Inventory Route: Non-NHS

CREW: ABB/MMB (TSC)	DATE: 06/16/2017	BRIDGE NO.: 04069

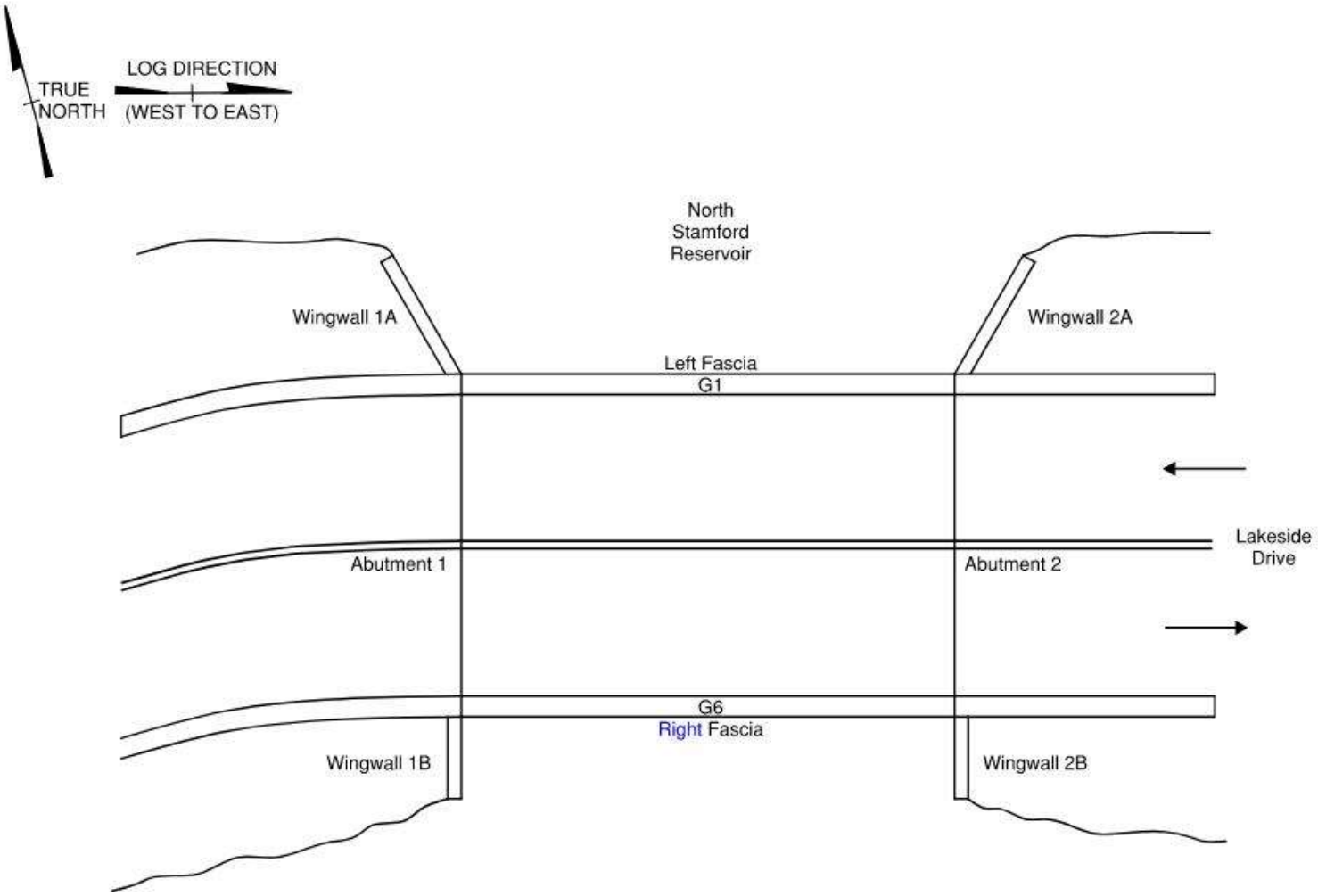

Key Plan
N.T.S.

REVISION 1	DATE: 06/26/2019	CREW: VB TECH: PKU, KN	REVISION 3	DATE:	CREW:
REVISION 2	DATE: 06/16/2021	CREW: FRW, VVB (TSC)	REVISION 4	DATE:	CREW:

Sketches
Inspection type: Routine
Inspection Date: 6/16/2021
Inspected by: TranSystems

:Bridge No 04069

Town: STAMFORD
Carried: LAKESIDE DRIVE
Crossed: NORTH STAMFORD RESERVOIR
Inventory Route: Non-NHS

CREW: ABB/MMB (TSC)	DATE: 06/16/2017	BRIDGE NO.: 04069

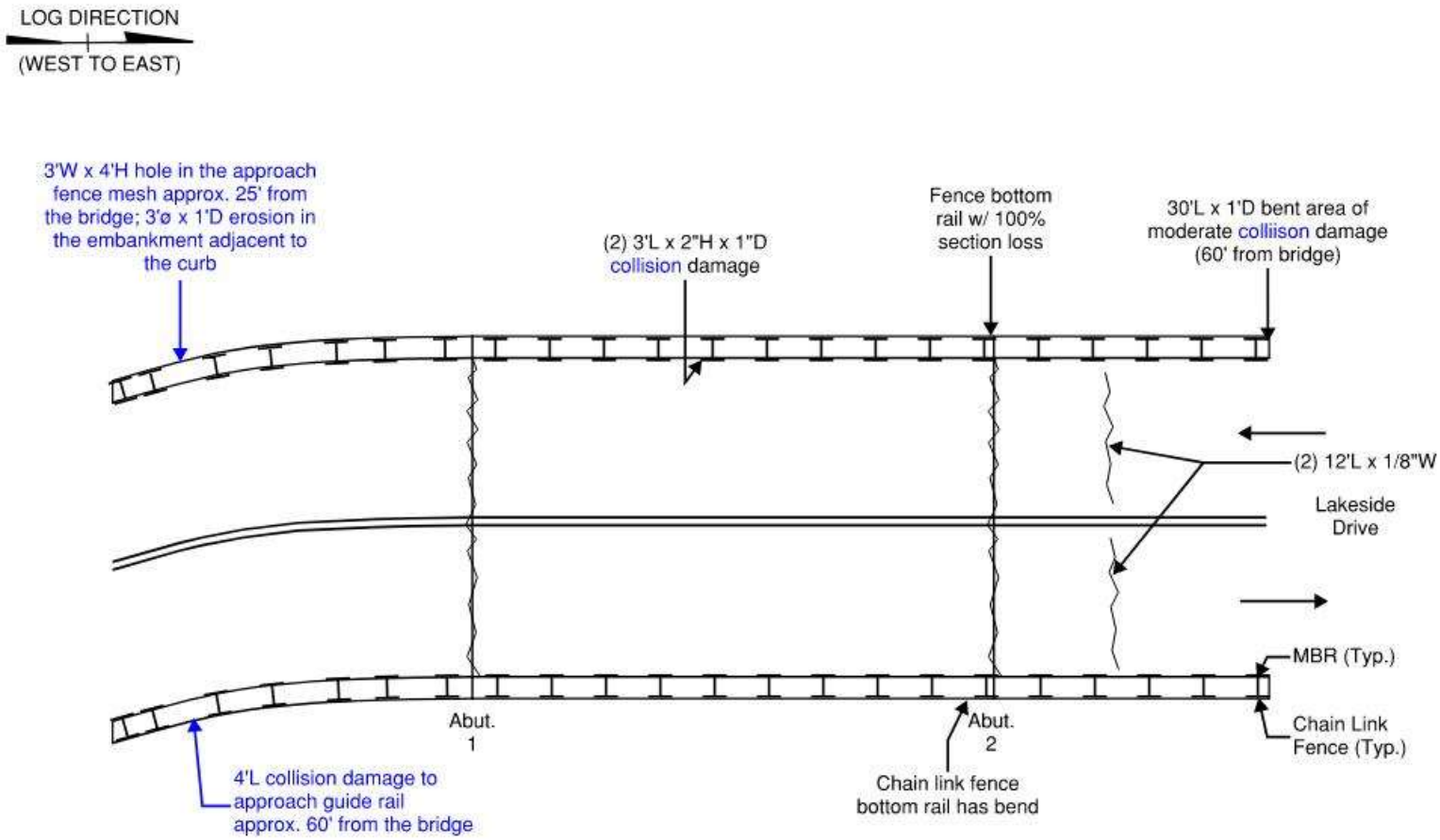

General Notes:
- Bituminous overlay has light wheel marks and deck ends have transverse cracks up to FW x 1/4"W.
- Average curb reveal on the north and south sides are 7-1/2".
- Concrete rail bases have random vertical and horizontal hairline cracks with efflorescence, pop-outs, minor collision scrapes and light scaling throughout.
- Metal bridge railings have random collision scrapes with light rust.
- Chain-link fences along bridge railings have light surface rust.
- Approach pavements have light wheel marks.
- Approach metal beam guide rails have minor colliison scrapes up to 10' long with light surface rust.

LEGEND:
- HOLLOW AREA
- SHALLOW REBAR
- SPALL AREA
- SPALL AREA WITH EXPOSED REBAR
- MAPCRACKS
- HAIRLINE CRACKS
- HONEYCOMB AREA
- SCALE AREA
- EFFLORESCENCE PRESENT
- METAL BEAM GUIDERAIL
- CURB REVEAL

Top of Deck
N.T.S.

REVISION 1	DATE: 06/26/2019	CREW: VB TECH: PKU, KN	REVISION 3	DATE:	CREW:
REVISION 2	DATE: 06/16/2021	CREW: VVB, FRW (TSC)	REVISION 4	DATE:	CREW:

Sketches
Inspection type: Routine
Inspection Date: 6/16/2021
Inspected by: TranSystems

:Bridge No 04069

Town: STAMFORD
Carried: LAKESIDE DRIVE
Crossed: NORTH STAMFORD RESERVOIR
Inventory Route: Non-NHS

CREW: ABB/MMB (TSC)	DATE: 06/16/2017	BRIDGE NO.: 04069

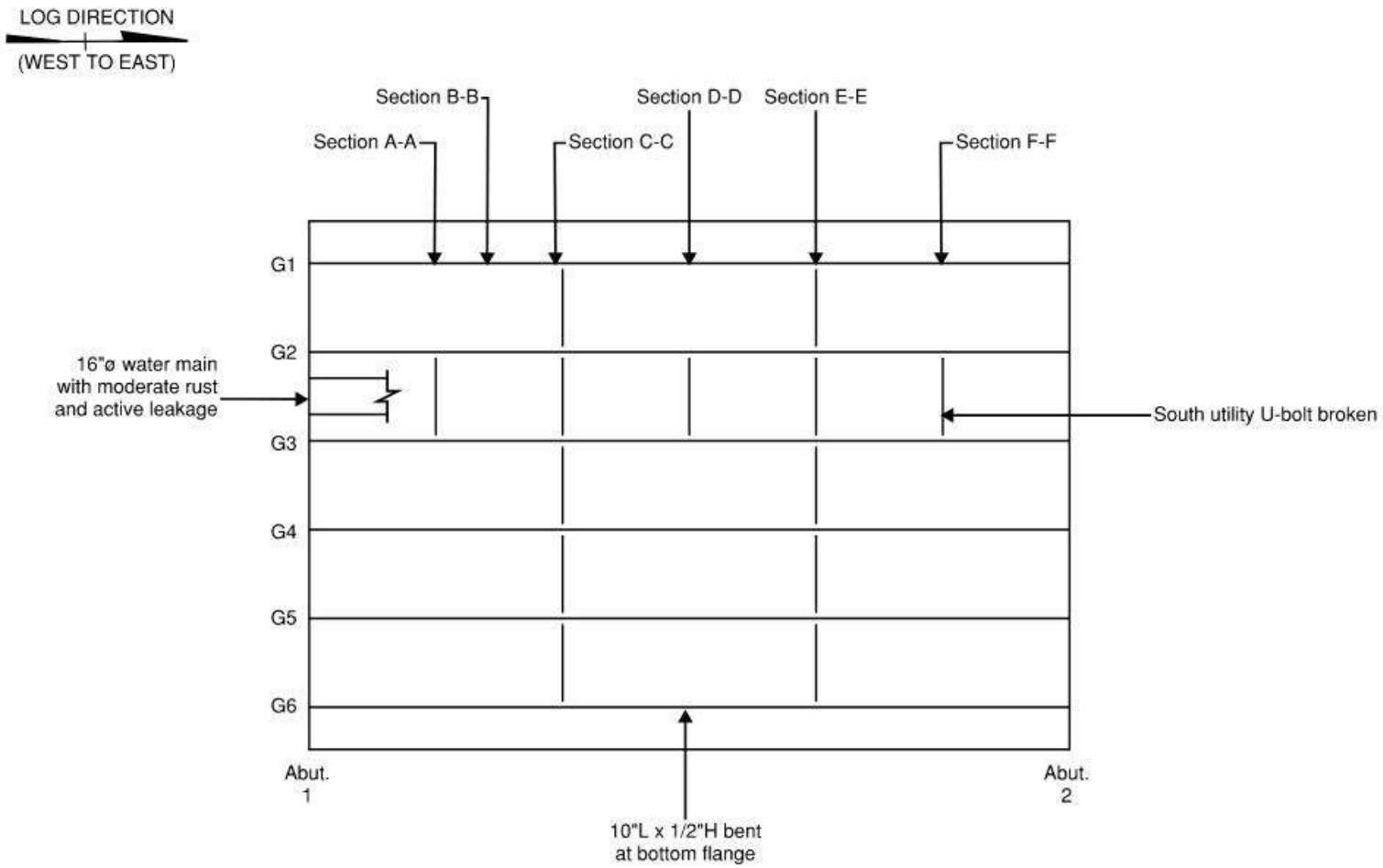

General Notes:
- Interior deck bays have S.I.P. forms with no significant deficiencies.
- Deck overhangs have transverse hairline cracks with efflorescence.
- Girder ends are encased in concrete (bearings not visible).
- Interior girder bottom of bottom flanges have 1/16" deep pitting throughout.
- Girders have areas with peeling paint (20%) and moderate rust (mainly near abutments).
- Diaphragms, connection bolts and welds have areas of peeling paint with light rust.
- Heavy pigeon debris, nest and droppings at random locations.
- See "Section Loss" sketches.

LEGEND:
- HOLLOW AREA
- SHALLOW REBAR
- SPALL AREA
- SPALL AREA WITH EXPOSED REBAR
- MAPCRACKS
- HAIRLINE CRACKS
- HONEYCOMB AREA
- SCALE AREA
- EFFLORESCENCE PRESENT

Underside of Deck and Framing

N.T.S.

REVISION 1	DATE: 06/26/2019	CREW: VB TECH: PKU, KN	REVISION 3	DATE:	CREW:
REVISION 2	DATE: 06/16/2021	CREW: FRW, VVB (TSC)	REVISION 4	DATE:	CREW:

Sketches
Inspection type: Routine
Inspection Date: 6/16/2021
Inspected by: TranSystems

:Bridge No 04069

Town: STAMFORD
Carried: LAKESIDE DRIVE
Crossed: NORTH STAMFORD RESERVOIR
Inventory Route: Non-NHS

CREW: ABB/MMB (TSC)	DATE: 06/16/2017	BRIDGE NO.: 04069

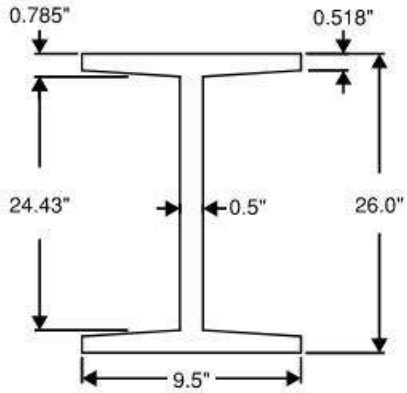

Original Bottom Flange Area (Flexure)
Area = (0.518" x 9.5") + 2 x 1/2 x [((9.5" - 0.5")/2) x (0.785" - 0.518")] + 0.5" x (0.785" - 0.518")
Area = 4.921 in^2 + 1.2015 in^2 + .1335 in^2
Area = 6.256 in^2

Original Web Area (Shear)
Area = 26.0" x 0.5"
Area = 13 in^2

Typical Cross Section (Girders 1-5)
N.T.S.

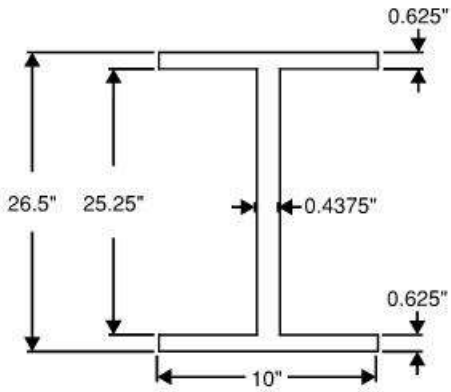

Original Bottom Flange Area (Flexure)
Area = 10" x 0.625"
Area = 6.25 in^2

Original Web Area (Shear)
Area = 26.5" x 0.4375"
Area = 11.59 in^2

Typical Cross Section W27 x 84
(Girder 6)
N.T.S.

Typical Girder Cross Sections

REVISION 1	DATE: 06/26/2019	CREW: VB TECH: PKU, KN	REVISION 3	DATE:	CREW:
REVISION 2	DATE: 06/16/2021	CREW: FRW, VVB (TSC)	REVISION 4	DATE:	CREW:

Sketches
Inspection type: Routine
Inspection Date: 6/16/2021
Inspected by: TranSystems

:Bridge No 04069

Town: STAMFORD
Carried: LAKESIDE DRIVE
Crossed: NORTH STAMFORD RESERVOIR
Inventory Route: Non-NHS

CREW: ABB/MMB (TSC)	DATE: 06/16/2017	BRIDGE NO.: 04069

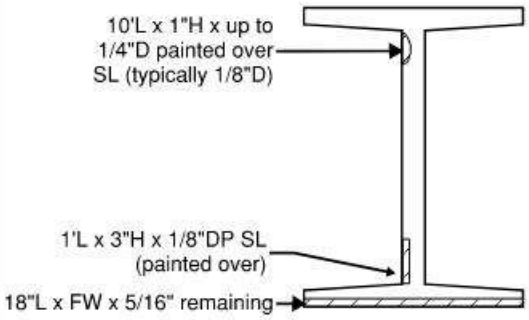

Section A-A
Beginning 6' from
Abutment 1,
looking west

Flexure Loss:
SL Area = (0.518" - 0.3125") x 9-1/2" = 1.95 in²
% Loss = 1.95 in² / 6.256 in² = 31.2%

Shear Loss:
SL Area = (1" x 1/4") + (3" x 1/8") = 0.625 in²
% Loss = 0.625 in² / 13 in² = 4.8%

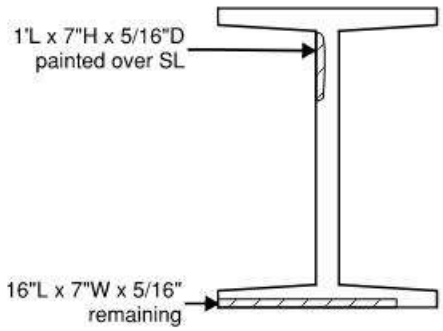

Section B-B
Beginning 9.5' from
Abutment 1,
looking west

Flexure Loss:
SL Area = (0.518" - 0.3125") x 7" = 1.44 in²
% Loss = 1.44 in² / 6.256 in² = 23.0%

Shear Loss:
SL Area = (7" x 5/16") = 2.1875 in²
% Loss = 2.1875 in² / 13 in² = 16.8%

Girder 1 Section Loss
N.T.S.

REVISION 1	DATE: 06/26/2019	CREW: VB TECH: PKU, KN	REVISION 3	DATE:	CREW:
REVISION 2	DATE: 06/16/2021	CREW: FRW, VVB (TSC)	REVISION 4	DATE:	CREW:

Sketches
Inspection type: Routine
Inspection Date: 6/16/2021
Inspected by: TranSystems

:Bridge No 04069

Town: STAMFORD
Carried: LAKESIDE DRIVE
Crossed: NORTH STAMFORD RESERVOIR
Inventory Route: Non-NHS

CREW: ABB/MMB (TSC)	DATE: 06/16/2017	BRIDGE NO.: 04069

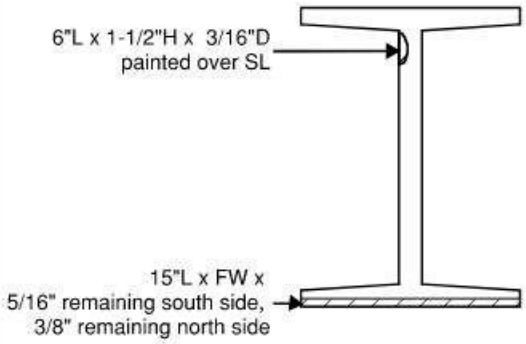

Section C-C
Beginning 11.3'
from Abutment 1,
looking west

Flexure Loss:
SL Area = [0.518" - ((0.3125" + 0.375")/2)] x 9-1/2" = 1.66 in^2
% Loss = 1.66 in^2 / 6.256 in^2 = 26.5%

Shear Loss:
SL Area = (1-1/2" x 3/16") = 0.28 in^2
% Loss = 0.28 in^2 / 13 in^2 = 2.2%

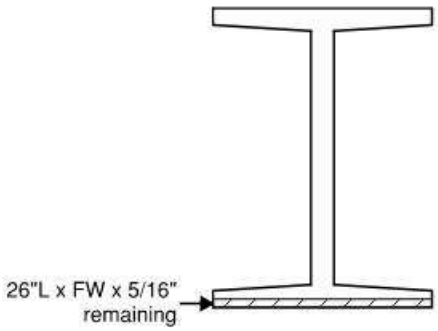

Section D-D
Beginning 17' from
Abutment 1,
looking west

Flexure Loss:
SL Area = (0.518" - 0.3125") x 9-1/2" = 1.95 in^2
% Loss = 1.95 in^2 / 6.256 in^2 = 31.2%

Girder 1 Section Loss
N.T.S.

REVISION 1	DATE: 06/26/2019	CREW: VB TECH: PKU, KN	REVISION 3	DATE:	CREW:
REVISION 2	DATE: 06/16/2021	CREW: FRW, VVB (TSC)	REVISION 4	DATE:	CREW:

Sketches
Inspection type: Routine
Inspection Date: 6/16/2021
Inspected by: TranSystems

:Bridge No 04069

Town: STAMFORD
Carried: LAKESIDE DRIVE
Crossed: NORTH STAMFORD RESERVOIR
Inventory Route: Non-NHS

CREW: ABB/MMB (TSC)	DATE: 06/16/2017	BRIDGE NO.: 04069

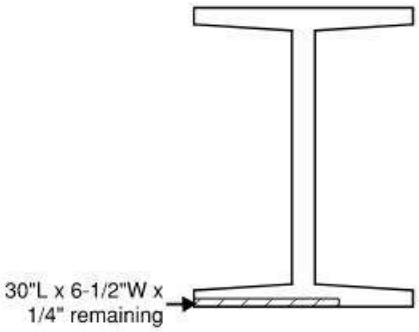

Section E-E
Beginning 23.2'
from Abutment 1,
looking west

Flexure Loss:
SL Area = (0.518" - 1/4") x 6-1/2" = 1.742 in^2
% Loss = 1.742 in^2 / 6.256 in^2 = 27.8%

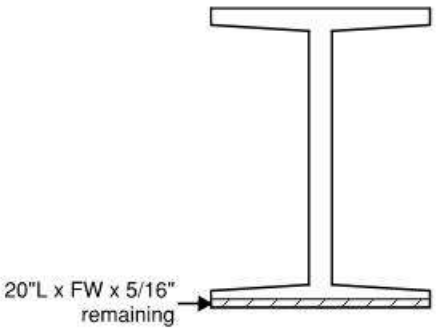

Section F-F
Beginning 28.8'
from Abutment 1,
looking west

Flexure Loss:
SL Area = (0.518" - 0.3125") x 9-1/2" = 1.95 in^2
% Loss = 1.95 in^2 / 6.256 in^2 = 31.2%

Girder 1 Section Loss
N.T.S.

REVISION 1	DATE: 06/26/2019	CREW: VB TECH: PKU, KN	REVISION 3	DATE:	CREW:
REVISION 2	DATE: 06/16/2021	CREW: FRW, VVB (TSC)	REVISION 4	DATE:	CREW:

Sketches
Inspection type: Routine
Inspection Date: 6/16/2021
Inspected by: TranSystems

:Bridge No 04069

Town: STAMFORD
Carried: LAKESIDE DRIVE
Crossed: NORTH STAMFORD RESERVOIR
Inventory Route: Non-NHS

CREW: ABB/MMB (TSC)	DATE: 06/16/2017	BRIDGE NO.: 04069

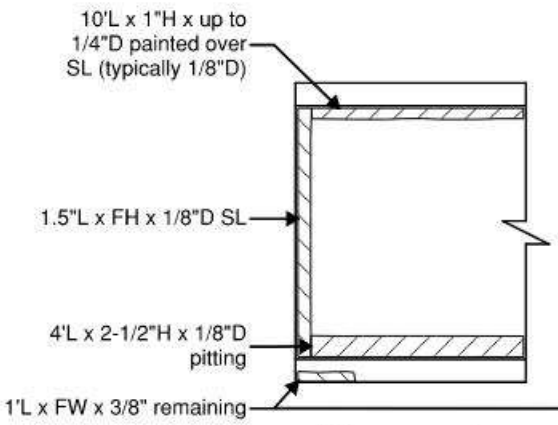

Abutment 1
South Elevation

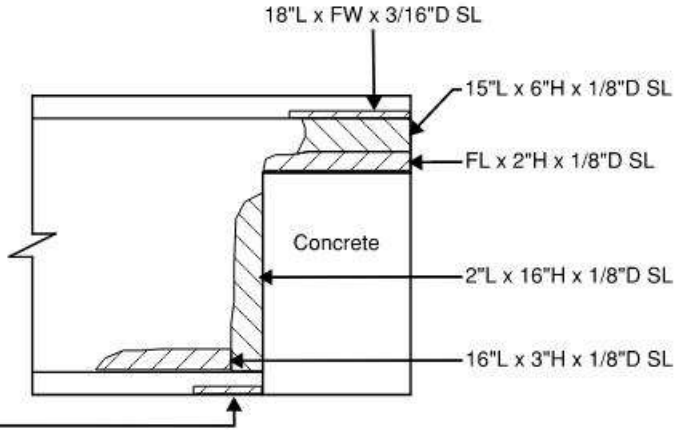

Abutment 1
North Elevation

Shear Loss:
SL Area = (24.43" x 1/8") + (16" x 1/8") = 5.05 in²
% Loss = 5.05 in² / 13 in² = 38.9%

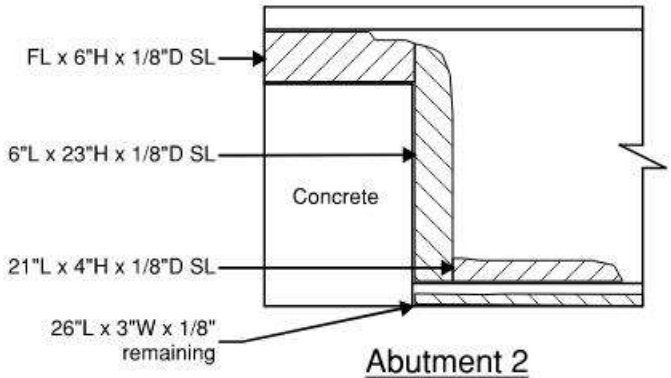

Abutment 2
North Elevation

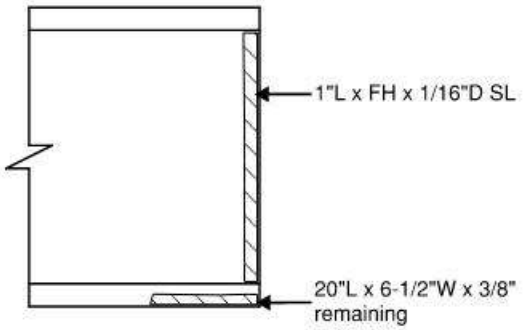

Abutment 2
South Elevation

Shear Loss:
SL Area = (23" x 1/8") + (24.43" x 1/16") = 4.40 in²
% Loss = 4.40 in² / 13 in² = 33.9%

Girder End Section Loss Girder 1

N.T.S.

REVISION 1	DATE: 06/26/2019	CREW: VB TECH: PKU, KN	REVISION 3	DATE:	CREW:
REVISION 2	DATE: 06/16/2021	CREW: FRW, VVB (TSC)	REVISION 4	DATE:	CREW:

Sketches
Inspection type: Routine
Inspection Date: 6/16/2021
Inspected by: TranSystems

:Bridge No 04069

Town: STAMFORD
Carried: LAKESIDE DRIVE
Crossed: NORTH STAMFORD RESERVOIR
Inventory Route: Non-NHS

CREW: ABB/MMB (TSC)	DATE: 06/16/2017	BRIDGE NO.: 04069

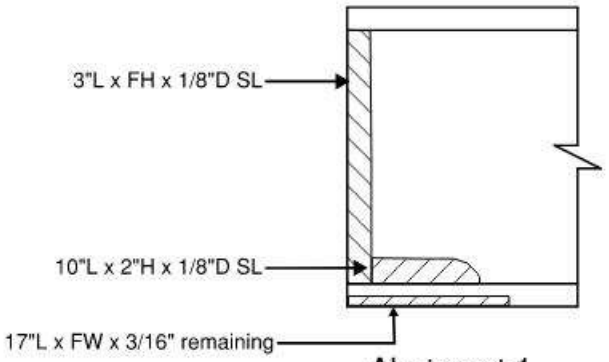

Abutment 1
South Elevation

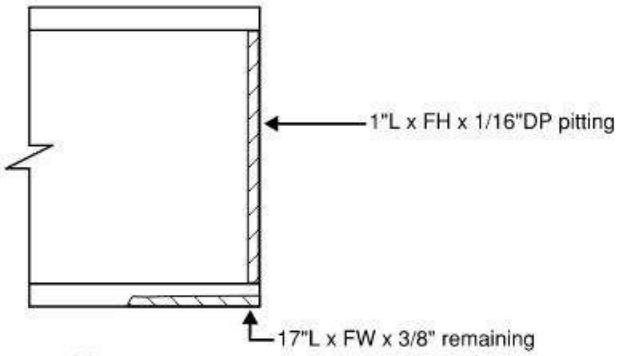

Abutment 1
North Elevation

Shear Loss:
SL Area = (24.43" x 1/8") + (1/2)x(24.43" x 1/16") = 3.82 in²
% Loss = 3.82 in² / 13 in² = 29.4%

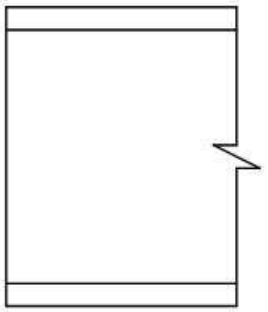

Abutment 2
North Elevation

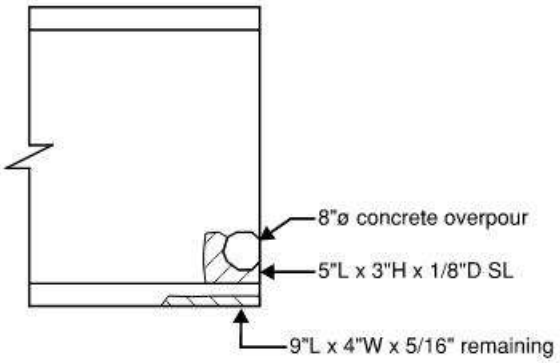

Abutment 2
South Elevation

Shear Loss:
SL Area = (3" x 1/8") = 0.375 in²
% Loss = 0.375 in² / 13 in² = 2.9%

Girder End Section Loss Girder 2

N.T.S.

REVISION 1	DATE: 06/26/2019	CREW: VB TECH: PKU, KN	REVISION 3	DATE:	CREW:
REVISION 2	DATE: 06/16/2021	CREW: FRW, VVB (TSC)	REVISION 4	DATE:	CREW:

Sketches
Inspection type: Routine
Inspection Date: 6/16/2021
Inspected by: TranSystems

:Bridge No 04069

Town: STAMFORD
Carried: LAKESIDE DRIVE
Crossed: NORTH STAMFORD RESERVOIR
Inventory Route: Non-NHS

CREW: ABB/MMB (TSC)	DATE: 06/16/2017	BRIDGE NO.: 04069

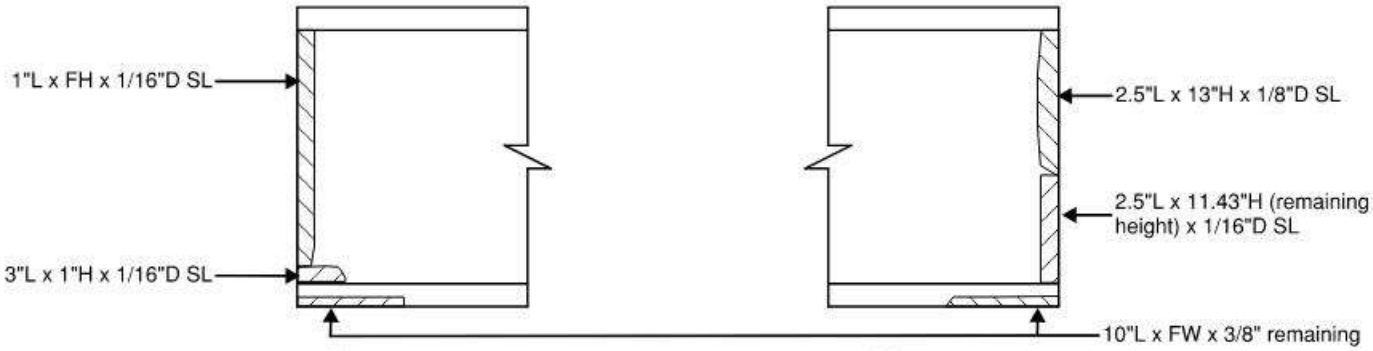

Abutment 1
South Elevation

Abutment 1
North Elevation

Shear Loss:
SL Area = (24.43" x 1/16") + (11.43" x 1/16") + (13" x 1/8") = 3.87 in²
% Loss = 3.87 in² / 13 in² = 29.7%

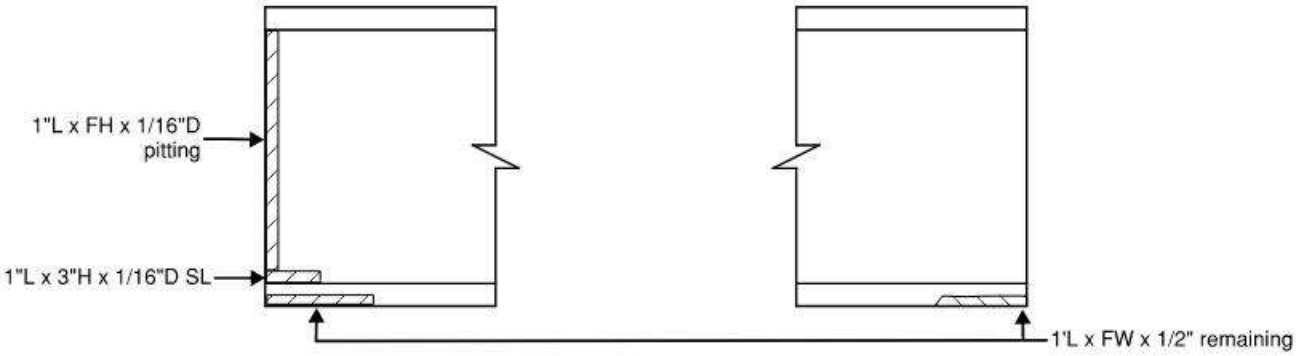

Abutment 2
North Elevation

Abutment 2
South Elevation

Shear Loss:
SL Area = (1/2) x (24.43" x 1/16") = 0.76 in²
% Loss = 0.76 in² / 13 in² = 5.9%

Girder End Section Loss Girder 3

N.T.S.

REVISION 1	DATE:06/26/2019	CREW:VB TECH: PKU, KN	REVISION 3	DATE:	CREW:
REVISION 2	DATE:06/16/2021	CREW:FRW, VVB (TSC)	REVISION 4	DATE:	CREW:

Sketches
Inspection type: Routine
Inspection Date: 6/16/2021
Inspected by: TranSystems

:Bridge No 04069

Town: STAMFORD
Carried: LAKESIDE DRIVE
Crossed: NORTH STAMFORD RESERVOIR
Inventory Route: Non-NHS

CREW: ABB/MMB (TSC)	DATE: 06/16/2017	BRIDGE NO.: 04069

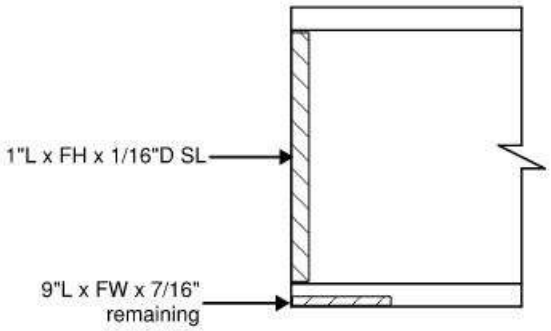

Abutment 1
South Elevation

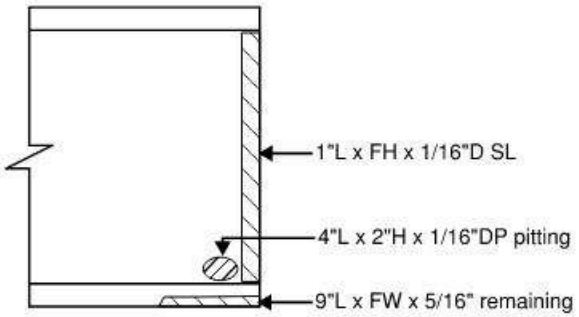

Abutment 1
North Elevation

Shear Loss:
SL Area = (24.43" x 1/16") + (24.43" x 1/16") = 3.05 in²
% Loss = 3.05 in² / 13 in² = 23.5%

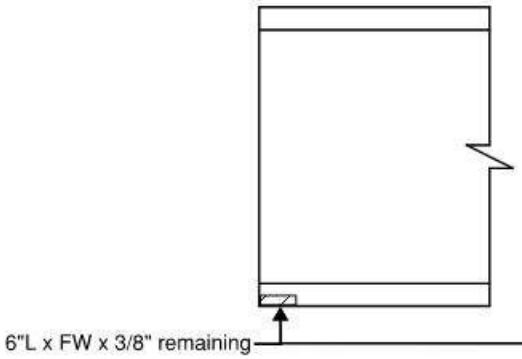

Abutment 2
North Elevation

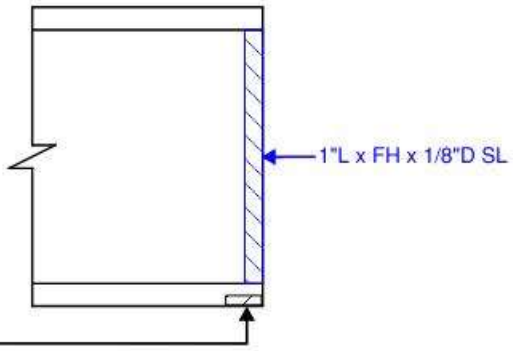

Abutment 2
South Elevation

Shear Loss:
SL Area = (24.43" x 1/8") = 3.05 in²
% Loss = 3.05 in² / 13 in² = 23.5%

Girder End Section Loss Girder 4

N.T.S.

REVISION 1	DATE: 06/26/2019	CREW: VB TECH: PKU, KN	REVISION 3	DATE:	CREW:
REVISION 2	DATE: 06/16/2021	CREW: FRW, VVB (TSC)	REVISION 4	DATE:	CREW:

Sketches
Inspection type: Routine
Inspection Date: 6/16/2021
Inspected by: TranSystems

:Bridge No 04069

Town: STAMFORD
Carried: LAKESIDE DRIVE
Crossed: NORTH STAMFORD RESERVOIR
Inventory Route: Non-NHS

CREW: ABB/MMB (TSC)	DATE: 06/16/2017	BRIDGE NO.: 04069

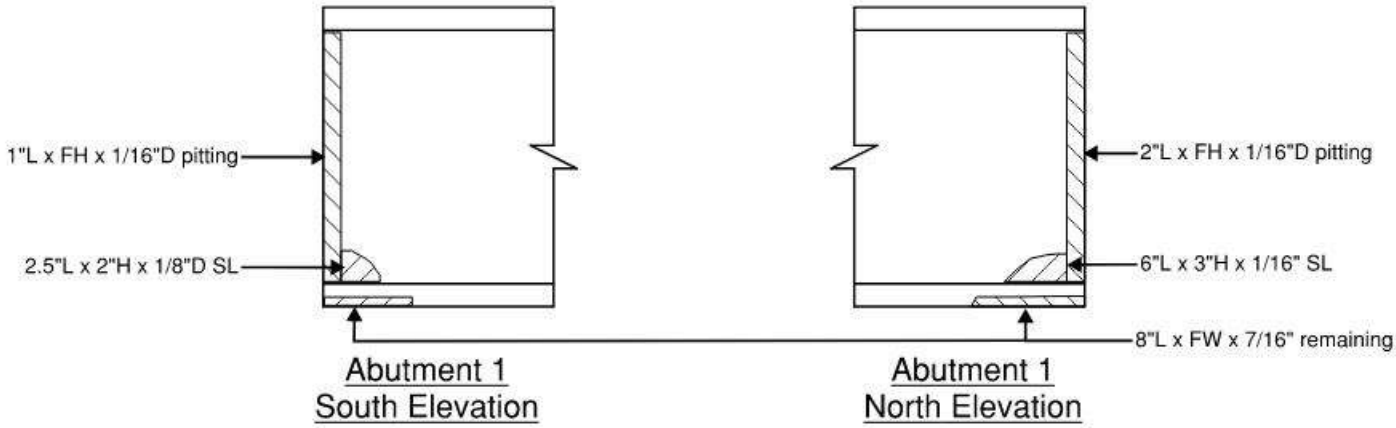

Shear Loss:
SL Area = 2 x [(24.43" x 1/16")/2] = 1.53 in²
% Loss = 1.53 in² / 13 in² = 11.7%

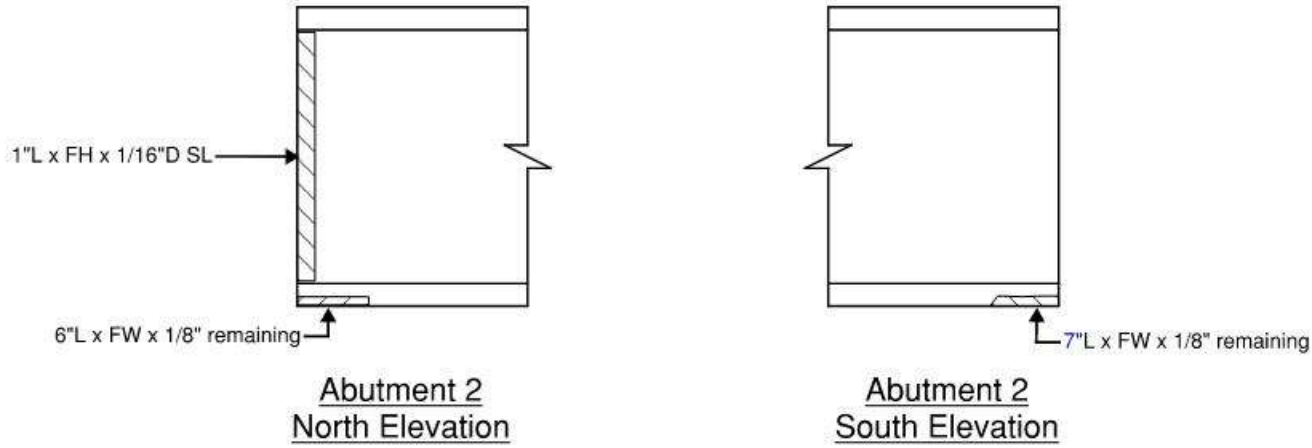

Shear Loss:
SL Area = (24.43" x 1/16") = 1.53 in²
% Loss = 1.53 in² / 13 in² = 11.7%

Girder End Section Loss Girder 5

N.T.S.

REVISION 1	DATE: 06/26/2019	CREW: VB TECH: PKU, KN	REVISION 3	DATE:	CREW:
REVISION 2	DATE: 06/16/2021	CREW: FRW, VVB (TSC)	REVISION 4	DATE:	CREW:

Sketches
Inspection type: Routine
Inspection Date: 6/16/2021
Inspected by: TranSystems

:Bridge No 04069

Town: STAMFORD
Carried: LAKESIDE DRIVE
Crossed: NORTH STAMFORD RESERVOIR
Inventory Route: Non-NHS

CREW: ABB/MMB (TSC)	DATE: 06/16/2017	BRIDGE NO.: 04069

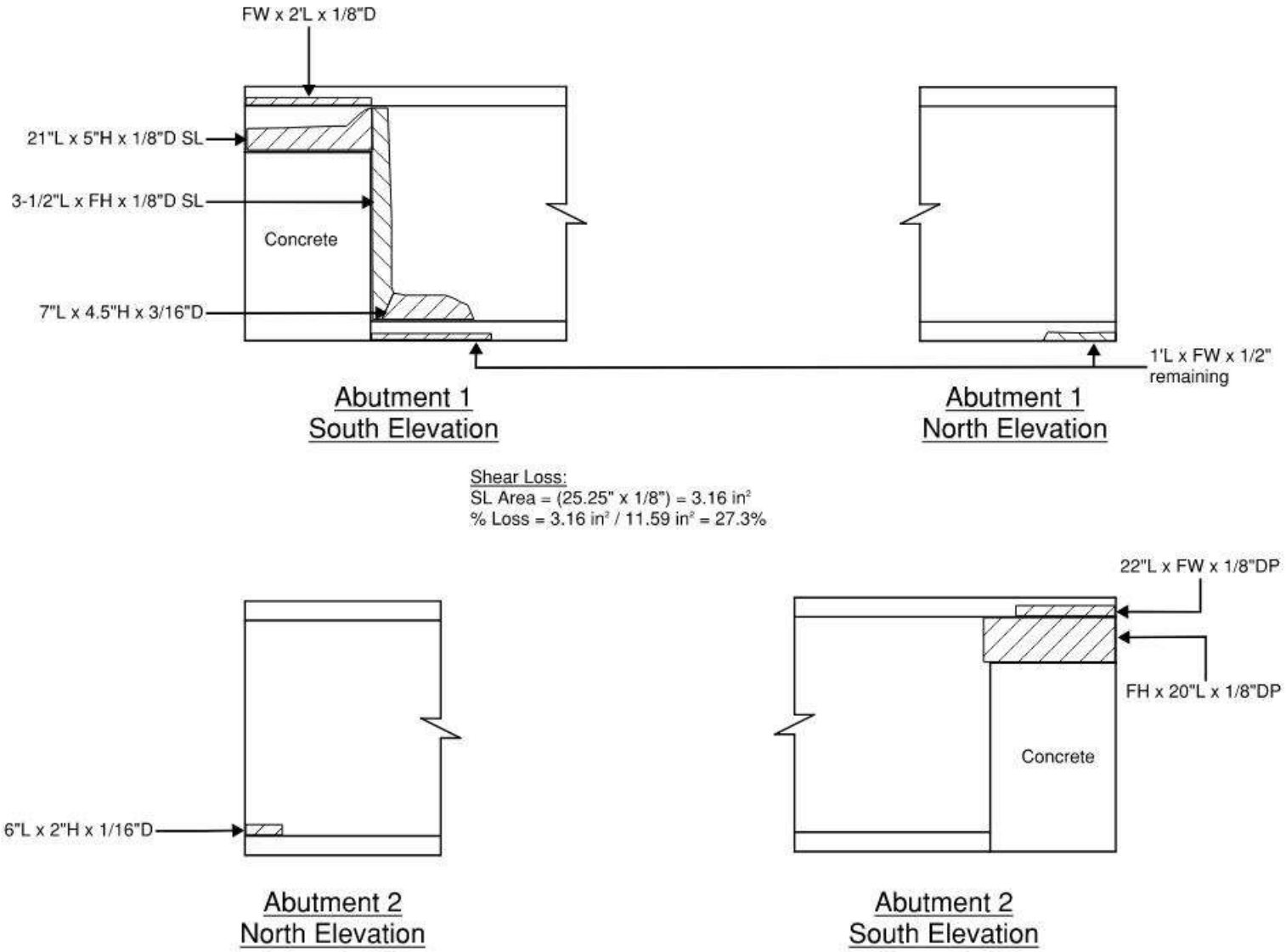

Shear Loss:
SL Area = (25.25" x 1/8") = 3.16 in^2
% Loss = 3.16 in^2 / 11.59 in^2 = 27.3%

Shear Loss:
SL Area = (2" x 1/16") + (6" x 1/8") = 0.875 in^2
% Loss = 0.875 in^2 / 11.59 in^2 = 7.5%

Girder End Section Loss Girder 6

N.T.S.

REVISION 1	DATE: 06/26/2019	CREW: VB TECH: PKU, KN	REVISION 3	DATE:	CREW:
REVISION 2	DATE: 06/16/2021	CREW: FRW, VVB (TSC)	REVISION 4	DATE:	CREW:

Sketches
Inspection type: Routine
Inspection Date: 6/16/2021
Inspected by: TranSystems

:Bridge No 04069

Town: STAMFORD
Carried: LAKESIDE DRIVE
Crossed: NORTH STAMFORD RESERVOIR
Inventory Route: Non-NHS

CREW: ABB/MMB (TSC)	DATE: 06/16/2017	BRIDGE NO.: 04069

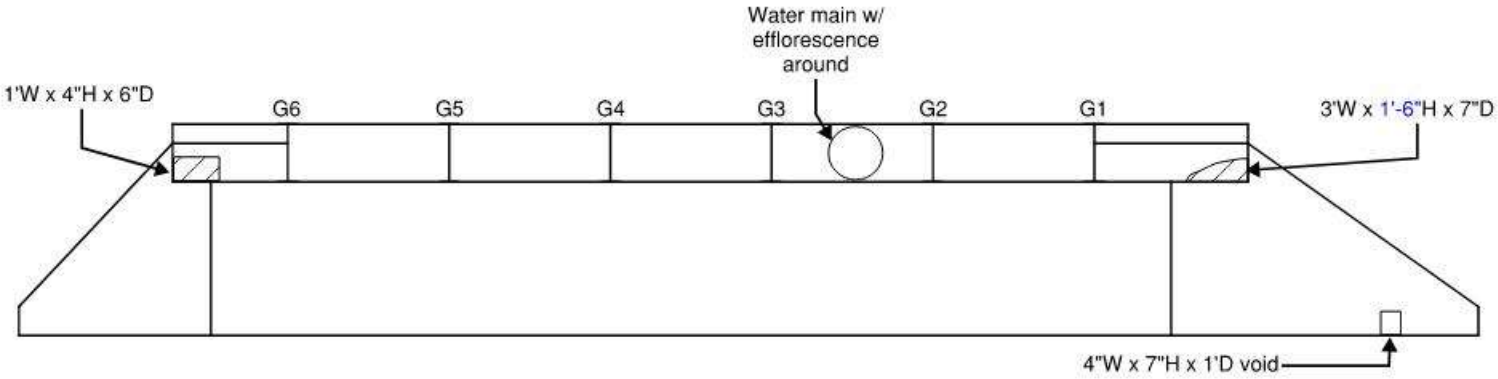

Wingwall 1B | Abutment 1 | Wingwall 1A

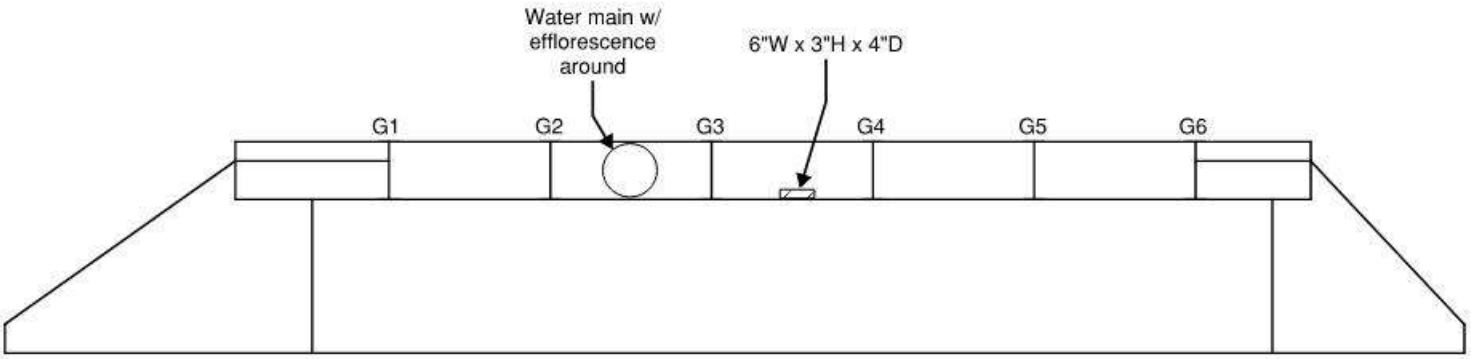

Wingwall 2A | Abutment 2 | Wingwall 2B

General Notes:
- Abutment stems have 10% cracked/deteriorated mortar and areas of heavy efflorescence and rust staining.
- Backwall has random map cracks open up to 1/8" wide with efflorescence.
- Backwall below girder bottom flanges has spalls up to full flange width x 1" high x 4" deep.
- Wingwalls have 50% breaking up mortar with voids and heavy efflorescence stains.
- Abutments and wingwalls have random voids up to 6" deep between stone mortar joints.

LEGEND:
- HOLLOW AREA
- SHALLOW REBAR
- SPALL AREA
- SPALL AREA WITH EXPOSED REBAR
- MAPCRACKS
- HAIRLINE CRACKS
- HONEYCOMB AREA
- SCALE AREA
- EFFLORESCENCE PRESENT

Abutments and Wingwalls
N.T.S.

REVISION 1	DATE: 06/26/2019	CREW: VB TECH: PKU, KN	REVISION 3	DATE:	CREW:
REVISION 2	DATE: 06/16/2021	CREW: VVB, FRW (TSC)	REVISION 4	DATE:	CREW:

Sketches
Inspection type: Routine
Inspection Date: 6/16/2021
Inspected by: TranSystems

:Bridge No 04069

Town: STAMFORD
Carried: LAKESIDE DRIVE
Crossed: NORTH STAMFORD RESERVOIR
Inventory Route: Non-NHS

CREW: ABB/MMB (TSC)	DATE: 06/16/2017	BRIDGE NO.: 04069

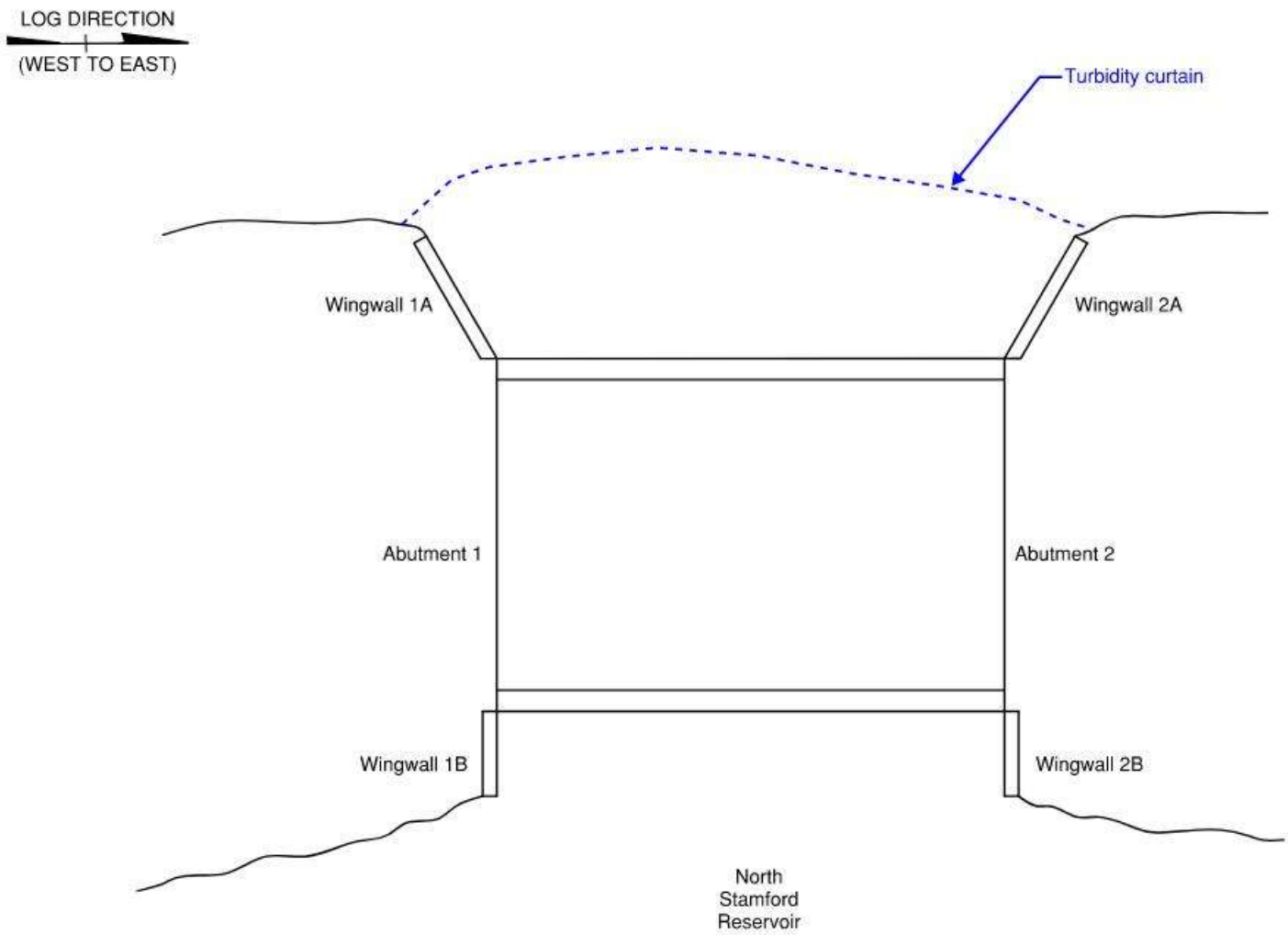

General Notes:
- Turbidity curtain at north channel extending 40' outwards from both abutments.
- Freeboard was 3'-5" at time of inspection.

Channel Diagram
N.T.S.

REVISION 1	DATE: 06/26/2019	CREW: VB TECH: PKU, KN	REVISION 3	DATE:	CREW:
REVISION 2	DATE: 06/16/2021	CREW: FRW, VVB (TSC)	REVISION 4	DATE:	CREW:

Form: Asset Photos
Inspection type: Routine
Inspection Date: 6/16/2021
Inspected by: TranSystems

:Bridge No 04069

Town: STAMFORD
Carried: LAKESIDE DRIVE
Crossed: NORTH STAMFORD RESERVOIR
Inventory Route: Non-NHS

Photo Number: 1 Photo Taken: 06/16/2021

Bridge ID at the north concrete rail base near abutment 2.

Photo Number: 2 Photo Taken: 06/16/2021

South elevation.

Photo Number: 3 Photo Taken: 06/16/2021

North elevation.

Photo Number: 4 Photo Taken: 06/16/2021

Bridge from west approach.

Photo Number: 5 Photo Taken: 06/16/2021

Bridge from east approach.

Photo Number: 6 Photo Taken: 06/16/2021

Top of deck, looking northwest.

Photo Number: 7 Photo Taken: 06/16/2021

Paved over deck joint over abutment 2. Note the transverse crack.

Photo Number: 8 Photo Taken: 06/16/2021

Underside of deck and framing, looking west. Note the stay-in-place forms.

Photo Number: 9 Photo Taken: 06/16/2021

Chain link fence bottom rail at the northeast corner. Note the bottom rail with full section loss.

Photo Number: 10 Photo Taken: 06/16/2021

Chain link fence bottom rail at the southeast corner is bent.

Photo Number: 11 Photo Taken: 06/16/2021

Northwest approach chain link fence, looking north. Note the hole in the fence mesh.

Photo Number: 12 Photo Taken: 06/16/2021

Northeast approach guide rail. Note the collision damage.

Photo Number: 13 Photo Taken: 06/16/2021

Northwest approach embankment. Note the erosion area adjacent to the curb.

Photo Number: 14 Photo Taken: 06/16/2021

North elevation of girder 1 at abutment 1. Note the bottom flange and the web with section loss.

Photo Number: 15 Photo Taken: 06/16/2021

North elevation of girder 1 at abutment 1. Note the top flange and web with section loss.

Photo Number: 16 Photo Taken: 06/16/2021

South elevation of girder 1 near midspan. Note the bottom flange with section loss.

Photo Number: 17 Photo Taken: 06/16/2021

South elevation of girder 1 near the quarter point and first intermediate diaphragm from abutment 1. Note the bottom flange with section loss.

Photo Number: 18 Photo Taken: 06/16/2021

South elevation of girder 6 at abutment 1. Note the top flange, web and bottom flange with section loss.

Photo Number: 19 Photo Taken: 06/16/2021

Bay 5 first intermediate diaphragm from abutment 1 and girders 5 and 6, looking east. Note the pigeon debris on the diaphragm top and bottom flanges and the girder bottom flanges. Also note the diaphragm with light rust.

Photo Number: 20 Photo Taken: 06/16/2021

North elevation of girder 6 near midspan. Note the bottom flange is bent.

Photo Number: 21 Photo Taken: 06/16/2021

Abutment 1 and wingwalls 1A and 1B. Note the heavy rust and efflorescence stains.

Photo Number: 22 Photo Taken: 06/16/2021

Abutment 1 backwall in bay 3. Note the map cracks and efflorescence.

Photo Number: 23 Photo Taken: 06/16/2021

Wingwall 1A. Note the spall at the top concrete portion.

Photo Number: 24 Photo Taken: 06/16/2021

Wingwall 1A near middle at the waterline. Note the void between the stones.

Photo Number: 25 Photo Taken: 06/16/2021

Channel view, looking south.

Photo Number: 26 Photo Taken: 06/16/2021

Channel view, looking north. Note the turbidity curtain.

Inspection Type: Underwater

BRIDGE NO. 04069

73070 - STAMFORD

LAKESIDE DRIVE

over

NORTH STAMFORD RESERVOIR

Underwater Inspection

10/15/2020

Inspected by: McLaren

TABLE OF CONTENTS

Section	Page Number
Report Title Page	1
Location Map	2
Structure Inventory and Appraisal (BRI-19)	3
Underwater Inspection (BRI-59)	7
Underwater Inspection (BRI-58)	8
NBE Table	10
Sketches	11
UW Drawings	12
Pictures	16

Report Title Page

Project No.: 170-3543

Structure: 04069 – Lakeside Drive over North Stamford Reservoir, Stamford

Inspected By: McLaren Technical Services **Inspection Date:** 10/15/2020

Professional Certification:

I hereby certify that this report, including all of its contents, has been approved by me, and that I am a duly licensed professional engineer under laws of the State of Connecticut.

Craig Plate, PE (McLaren Technical Services)

Project Manager: Craig Plate, PE

CT License No.: 33502 **Date:** 10/22/2020

Form: Location
Inspection type: Underwater
Inspection Date: 10/15/2020
Inspected by: McLaren Engineering Group

:Bridge No 04069

Town: STAMFORD
Carried: LAKESIDE DRIVE
Crossed: NORTH STAMFORD RESERVOIR
Inventory Route: Non-NHS

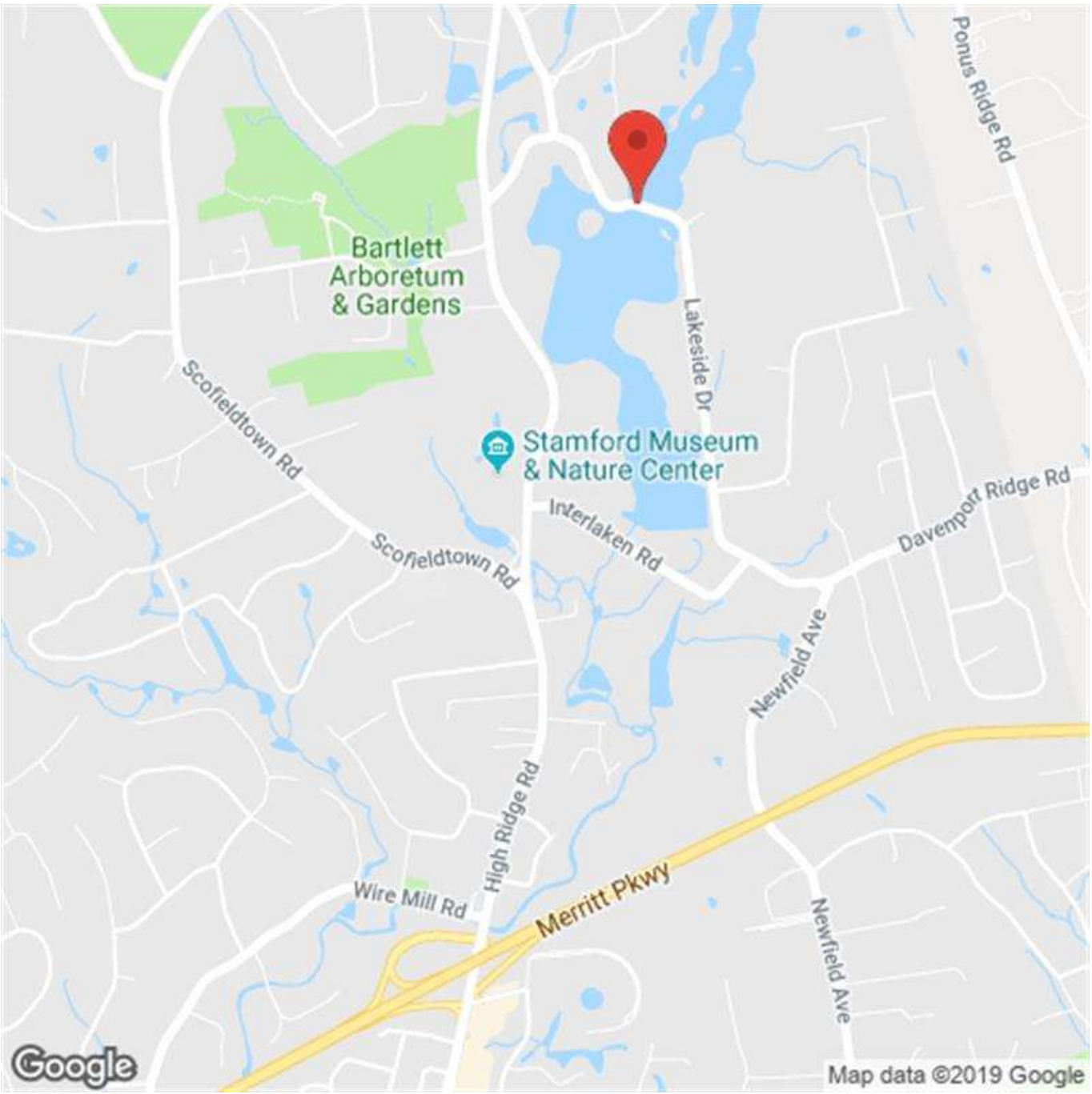

Location Map # 1

Form: BRI-19, Rev. 2/15
Inspection type: Underwater
Inspection Date: 10/15/2020
Inspected by: McLaren Engineering Group

:Bridge No 04069

Town: STAMFORD
Carried: LAKESIDE DRIVE
Crossed: NORTH STAMFORD RESERVOIR
Inventory Route: Non-NHS

STRUCTURE INVENTORY & APPRAISAL

INSPECTION

Structurally Deficient Y **Functionally Obsolete** N

Sufficiency Rating 30.6

(90) Inspection Date **(91) Frequency** 24

Indepth Insp No **Proposed next Indepth Year**

Deck Survey Date 1/1/1900 **Class** 01

Access 0 - None **Flagman** 0

	Frequency	Date	Type
Fracture			
Underwater	48	10/15/2020	B Underwater Only
Special			

IDENTIFICATION

Bridge Name 04069

Town Code - Name 73070 - STAMFORD

(5) Inventory Route

(A) Record Type 1: Route carried "on" the structure

(B) Signing Prefix 5 - CITY STREET

(C) Level of Service 0 - NONE OF THE BELOW

(D) Route Number. 00000

(E) Dir Suffix 0 - NOT APPLICABLE

(6A) Featured Intersected NORTH STAMFORD RESERVOIR

(6B) Critical Facility Indicator

(7) Facility Carried LAKESIDE DRIVE

(9) Location OPP RT 137, N OF ROUTE 15

(11) Mile Post 0 Miles

(16) Latitude 41 Deg. 8 Min. 3.91 Sec.

(17) Longitude -73 Deg. 32 Min. 24.42 Sec.

(98) Border Bridge

(A) State Code (B) Percent Responsibility %

(C) Border Town Name

(99) Border Bridge Structure No.

STRUCTURE TYPE & MATERIALS

(43) Structure Type, Main

A) Material 3 - Steel

B) Design Type 02 - Stringer/Multi-beam or Girder

(44) Structure Type, Approach

A) Material 0 - Other

B) Design Type 00 - Other

(45) Number of Spans, Main Unit 001

(46) Number of Approach Spans 0000

(107) Deck Structure Type 1 - Concrete Cast-in-Place

(108) Wearing Surface/Protection Systems

A) Type of Wearing Surface 6 - Bituminous

B) Type of Membrane 2 - Preformed Fabric

C) Type of Deck Protection 1 - Epoxy Coated Reinforcing

Substructure

A) Material 1 - STONE

B) Design Type 1 - FULL HEIGHT STEM

Paint

Type

Year

Comment

GEOMETRIC DATA

(48) Length of Maximum Span 36 ft.

(49) Structure Length 40 ft.

(50) Curb or Sidewalk Widths

A) Left 0 ft. 0 in. B) Right 0 ft. 0 in.

(51) Bridge Roadway Width Curb to Curb 23 ft. 3 in.

(52) Deck Width, Out to Out 24 ft. 10 in.

(32) Approach Roadway Width 18 ft.

Form: BRI-19, Rev. 2/15
Inspection type: Underwater
Inspection Date: 10/15/2020
Inspected by: McLaren Engineering Group

:Bridge No 04069

Town: STAMFORD
Carried: LAKESIDE DRIVE
Crossed: NORTH STAMFORD RESERVOIR
Inventory Route: Non-NHS

(33) Bridge Median: 0 - No median

Deck Area: 993 sq. ft.

(34) Skew Angle: 00 deg.

(35) Structure Flared: 0 - No flare

(10) Inv. Rte. Min. Vert. Clearance: 99 ft. 99 in.

(47) Inv. Rte. Total Horiz. Clr.: 23 ft. 3 in.

Log Inv. Rte. Total Horiz. Clr.: 23 ft. 3 in.

RLog Inv. Rte. Total Horiz. Clr.: 0 ft. 0 in.

(53) Min. Vert. Clearence Over Bridge: 0 ft. 0 in.

(54) Log-Min. Vert. Underclearance: N ref. 0 ft. 0 in.

(55) Min. Lat Underclearance on Right: N ref. 0 ft. 0 in.

(56) Min. Lat Underclearance on Left: 0 ft. 0 in.

AGE AND SERVICE

Year Built: 1936 (106) Year Reconstructed: 1993

(42) Type of Service

A) On: 1 - Highway

B) Under: 5 - Waterway

(28) Number of Lanes

A) On: 02 B) Under: 00

(29) Average Daily Traffic: 5485

Is Above Half ADT?: No

(109) Precent Truck: 4 %

(30) Years of ADT: 2020

(19) Bypass, Detour Length: 1 Miles

CONDITION

(58) Deck: 7

(59) Superstructure: 3

(60) Substructure: 6

(61) Channel & Channel Protections: 6

(62) Culverts: N

(36) Traffic Safety Features

A) Bridge Railings: 0

B) Transitions: 0

C) Approach Guardrail: 0

D) Approach Guardrail Ends: 1

APPRAISALS

(67) Structural Evaluation: 3

(68) Deck Geometry: 2

(69) Underclearances, Vert. & Horiz.: N

(71) Waterway Adequacy: 7

(72) Approach Roadway Alignment: 3

(113) Scour Critical: 8

COMMENTS

WATERWAY

Drainage Basin Waterway: 7405 - Rippowam River

(38) Navigation Control: 0 - No navigation control on waterway (bridge permit not required)

(39) Navigation Vertical Clearance: 0 ft.

(40) Navigation Horiz. Clr.: 0 ft.

(111) Pier/Abutment Navigation:

(116) Vert-Lift Brg Nav Min: 0 ft. 0 In.

CLASSIFICATION

(112) NBIS Bridge Length: Yes

(104) Highway System: 0 - Structure/Route is NOT on NHS

(26) Functional Class: 19 - Urban - Local

(100) Defense Highway: 0 - Not a STRAHNET route

(101) Parallel Structure: N - No parallel structure

(102) Direction of Traffic: 2 - 2-way traffic

Form: BRI-19, Rev. 2/15
Inspection type: Underwater
Inspection Date: 10/15/2020
Inspected by: McLaren Engineering Group

:Bridge No 04069

Town: STAMFORD
Carried: LAKESIDE DRIVE
Crossed: NORTH STAMFORD RESERVOIR
Inventory Route: Non-NHS

(103) Temporary Structure	
(110) Designated National Network	0 - Inventory route not on network
(20) Toll	3 - On Free Road
(21) Maintain	04 - City or Municipal Highway Agency
(22) Owner	04 - City or Municipal Highway Agency
Report Class	L - LOCAL
(37) Historical Significance	5 - Not eligible for National Register

POSTED SIGNS

Other Posted Sign 1	2 - Narrow bridge
Other Posted Sign 2	

	Actual	Recomended	
Posted Load Single Unit Truck			tons
Posted Load Semi-Trailer Truck			tons
Posted Load 4 Axle Truck			tons
Posted Load 3S2 Truck			tons
All Vehicles			tons
Posted Vert. Clearance on Bridge	ft.	in.	
Posted Vert. Underclearance	ft.	in.	
Posted Speed Limit on Bridge	m.p.h.		

OTHER FEATURES

Fence Required	Yes
Fence Present	Yes
Fence Type	2 - Chain Link
Fence Height	10.8
Fence Material	2 - Steel
Fence Top Type	1 - Vertical
Barrel Ladders	No
Stand Pipes	No
Catwalks	No
Moveable Inspection System	No
Haunches Present over Roadway	NO
Utilities	2 | Water

PROPOSED IMPROVEMENTS

(75A) Type of Work Proposed	31 - Replacement - Load/Geometry
(75B) Work Done By	1 - Work to be done by contract
(76) Length of Structure Improvement	ft.
(94) Bridge Improvement Cost	$
(95) Roadway Improvement Cost	$
(96) Total Project Cost	$ 1720
(97) Year of Improvement Estimate	2018
(114) Future ADT	8150
(115) Year of Future ADT	2040
DOT Bridge Program List No	FLBP
Project No	0135-0343
Advertised Date	11/10/2021

LOAD RATING & POSTING

(31) Design Load	5 - HS 20
(63) Operating Rating Type	1 - Load Factor (LF)
(64) Operating Rating	68.7
(65) Inventory Rating Type	1 - Load Factor (LF)
(66) Inventory Rating	41.4
Evaluation Code	L - Load Factor
Year of Evaluation	2011
(70) Bridge Posting	5 - Equal to or above legal loads
(41) Structure Status	A - Open

Form: BRI-19, Rev. 2/15
Inspection type: Underwater
Inspection Date: 10/15/2020
Inspected by: McLaren Engineering Group

:Bridge No 04069

Town: STAMFORD
Carried: LAKESIDE DRIVE
Crossed: NORTH STAMFORD RESERVOIR
Inventory Route: Non-NHS

INSPECTOR'S SIGNATURES:

1) Robert Vusconti Date: 10/22/2020

2) David Murphy Date: 11/02/2020

3) Carl Smith Date: 11/02/2020

4) Date:

P.E. SIGNATURE: Craig Plate Date: 11/02/2020

P.E. # 33502

Reviewed By: Carl DeLucia Date: 11/19/2020

Carl DeLucia

UNDERWATER INSPECTION (BRI-59)

Bridge: 04069 Town: 73070 - STAMFORD Carried: LAKESIDE DRIVE Crossed: NORTH STAMFORD RESERVOIR

Total Number of Piers:	0
Piers in the Water:	0
Boat Used?	No
Boat Size:	N/A
Dive Station Used?	Yes
Access to Bridge:	Shore
Access/ Equipment Comments U/W:	Commercial SCUBA Bridge access is only via a locked gate. Call Aquarion Water Co., (203) 322-9320 Mike Claps for access.
Type of water:	Fresh
Marine Growth:	Light algae
Max Water Depth:	11.2'
Max Water Depth at Pier Or Abutment:	7.8'
Current Strength:	None
U/W Visibility:	3.0'
Bottom Composition:	Cobble up to 0.5' in diameter and sand, silt, and riprap up to 1.0' in diameter.

Form: BRI-58.
Inspection type: Underwater
Inspection Date: 10/15/2020
Inspected by: McLaren Engineering Group

:Bridge No 04069

Town: STAMFORD
Carried: LAKESIDE DRIVE
Crossed: NORTH STAMFORD RESERVOIR
Inventory Route: Non-NHS

UNDERWATER INSPECTION

ITEM	*RATING*	*REMARKS*
60. SUBSTRUCTURE	6	
ABUTMENT 1:	7	West abutment.
STEM	7	The abutment stem exhibits the following deficiencies: - Less than 5% loose or missing mortar. - Light to heavy efflorescence and rust staining along the stem, concentrated on the top 3', due to the deteriorated concrete cap. - Isolated cracks in the mortar between stones up to 1/8" wide. - A 2' high x hairline crack in the stone, 7' above the water surface. See Abutment 1 drawing and Photo 4.
FOOTING	N	Not visible
EROSION	8	Embankments are lined with rip rap and exhibit no erosion.
SETTLEMENT	8	None noted.
SCOUR	7	The mudline elevations along Abutment 1 has exhibited minor changes since the 2016 inspection with aggradation up to 0.4' and degradation up to 0.1'. See Abutment 1 drawing.
WINGWALLS	6	The wingwalls typically exhibited less than 5% loose or missing mortar, light to heavy efflorescence and rust staining on the top 3', and cracks up to 1/8" wide in the mortar between stones. Wingwall 1A exhibited the following deficiencies: - Area of deteriorated mortar between stones 12' high x 5' wide. - Crack in the stone 1' long x hairline. The concrete cap on the wingwalls exhibit full width hairline cracks and deterioration up to 1' diameter. The concrete cap is located outside the limit of inspection. See Abutment 1 and North Elevation drawings and Photos 6 - 9.
General Remarks:		
ABUTMENT 2:	7	East abutment.
STEM	7	The abutment stem exhibits the following deficiencies: - Less than 5% loose or missing mortar. - Light to heavy efflorescence and rust staining along the stem, concentrated on the top 3', due to the deteriorated concrete cap. - Isolated cracks in the mortar between stones up to 1/8" wide. - A 2' high x hairline crack in the stone, 7' above the water surface. See Abutment 2 drawing and Photo 5.
FOOTING	N	Not visible
EROSION	8	Embankments are lined with rip rap and exhibit no erosion.
SETTLEMENT	8	None noted.
SCOUR	8	The mudline elevations along Abutment 2 has exhibited minor changes since the 2016 inspection with aggradation up to 0.1' and degradation up to 0.2'.

		See Abutment 2 drawing.
WINGWALLS	6	The wingwalls typically exhibited less than 5% loose or missing mortar, light to heavy efflorescence and rust staining on the top 3', and cracks up to 1/8" wide in the mortar between stones. Wingwall 2A exhibited the following deficiencies: - Crack in the stone 2' high x 1/8" wide at the water surface. Wingwall 2B exhibited the following deficiencies: - Crack in the stone 1' long x 1/4" wide with penetration up to 3/4", 4' above the water surface. - Loose/missing stones up to 1' diameter (outside the limit of inspection). The concrete cap on the wingwalls exhibit full width hairline cracks and deterioration up to 1' diameter. The concrete cap is located outside the limit of inspection. See Abutment 2 and North Elevation drawings and Photos 10 - 13.

General Remarks:

---

61. CHANNEL & CHANNEL PROTECTION:

	6	Stamford Reservoir, no flow noted at the time of inspection.
CHANNEL SCOUR	6	The mudline elevations in the channel exhibited minor to moderate changes since the 2016 inspection with aggradation up to 2.8' and degradation up to 2.0'. Changes in the mudline elevations could be due to the presence of rip rap in the channel. Sounding elevations typically exhibited less than 1' variations. See Sounding Plan drawing.
EMBANKMENT EROSION	8	Embankments are lined with rip rap and exhibit no erosion.
DEBRIS	7	Moderate man-made debris were recorded along the mudline of both abutments.
VEGETATION	8	Embankments are lined with rip rap, well vegetated above the rip rap.
CHANNEL CHANGE	8	No apparent change to the channel since the 2016 inspection.
FENDER SYSTEM	N	
SPUR DIKES & JETTIES	N	
RIP RAP	8	1' diameter rip rap was found at all wingwalls, along the abutments and along the embankments. No notable deficiencies were noted.

General Remarks: There is a silt curtain placed in the water across the channel at the north end of the bridge.

NATIONAL BRIDGE ELEMENTS RECORDING SHEET *								
Structure No. 04069		By: McLaren Technical Services	Date: 10/15/2020					
Element /Str. Unit No.	Env	Element/Structure Unit Description	Total Qty.	Units	Condition State Quantity			
					CS1	CS2	CS3	CS4
SUBSTRUCTURE								
Piers								
217	Mod.	Masonry Abutment	50	LF	0	2	48	0
1120		Efflorescence/Rust Staining	24		0	0	24	0
1610		Mortar Breakdown (Masonry)	24		0	0	24	0
1620		Split/Spall (Masonry)	2		0	2	0	0

* Includes only defects from the high water mark to the channel bottom.

Sketches
Inspection type: Underwater
Inspection Date: 10/15/2020
Inspected by: McLaren Engineering Group

:Bridge No 04069

Town: STAMFORD
Carried: LAKESIDE DRIVE
Crossed: NORTH STAMFORD RESERVOIR
Inventory Route: Non-NHS

CREW: ABB/MMB (TSC)	DATE: 06/16/2017	BRIDGE NO.: 04069

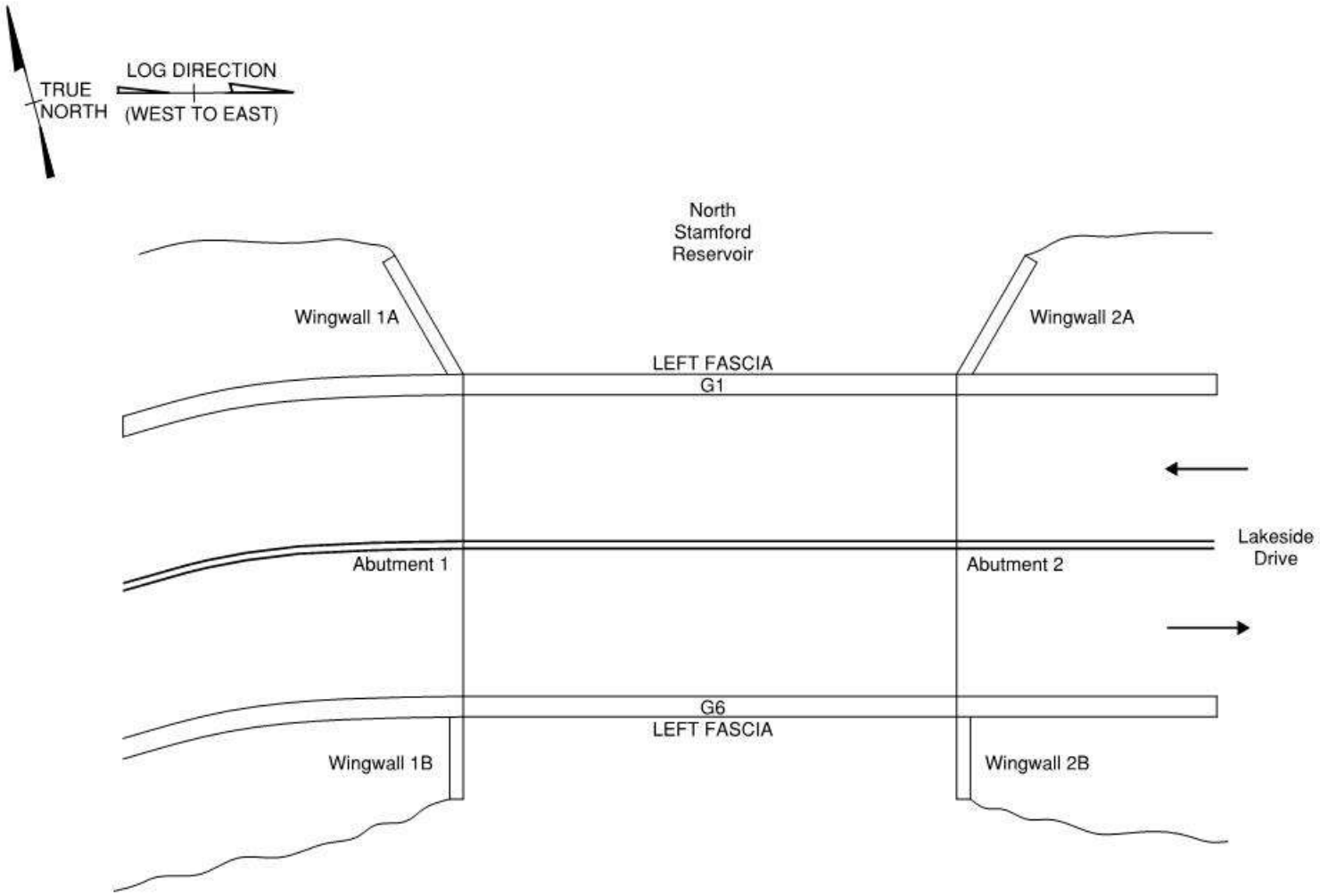

Key Plan
N.T.S.

REVISION 1	DATE: 06/26/2019	CREW: VB TECH: PKU, KN	REVISION 3	DATE:	CREW:
REVISION 2	DATE: 10/15/2020	CREW: McLaren: CGS, RMV, DTM	REVISION 4	DATE:	CREW:

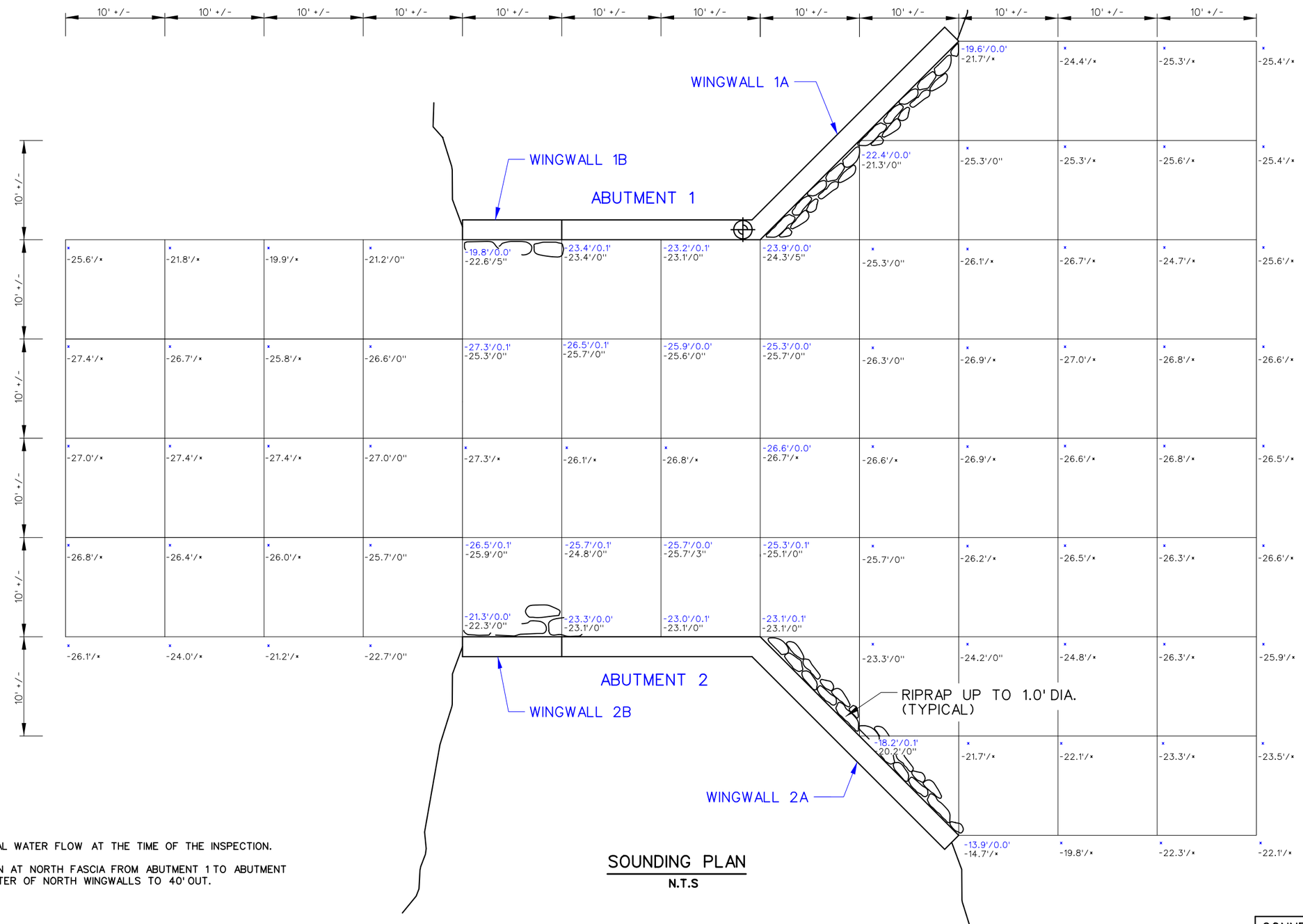

SOUNDING PLAN

N.T.S

NOTE:

1. THERE WAS MINIMAL WATER FLOW AT THE TIME OF THE INSPECTION.
2. TURBIDITY CURTAIN AT NORTH FASCIA FROM ABUTMENT 1 TO ABUTMENT 2 AND FROM CENTER OF NORTH WINGWALLS TO 40' OUT.

LEGEND FOR BOTTOM ELEVATIONS

ELEVATION/PENETRATION = -0.0'/0.0'
OCT. 2020 = -0.0'/0.0'
OCT. 2016 = -0.0'/0"
* INDICATES NO INFORMATION

LEGEND FOR SYMBOLS

⊕ DATUM ELEV. 0.0' TAKEN FROM THE BOTTOM OF THE I-BEAM AT THE NORTH END OF ABUTMENT 1.

▽ W.S. ELEV. -16.1' (2020)
-11.8' (2016)

CONNECTICUT DEPARTMENT OF TRANSPORTATION

BRIDGE NO. 04069
LAKESIDE DRIVE OVER NORTH STAMFORD RESERVOIR
STAMFORD CONNECTICUT

SOUNDING PLAN

INSPECTED BY: CGS REVISED BY: RMV	SCALE: AS SHOWN	DATE OF INSPECTION 10/15/2020	DRAWING NO. 04069A

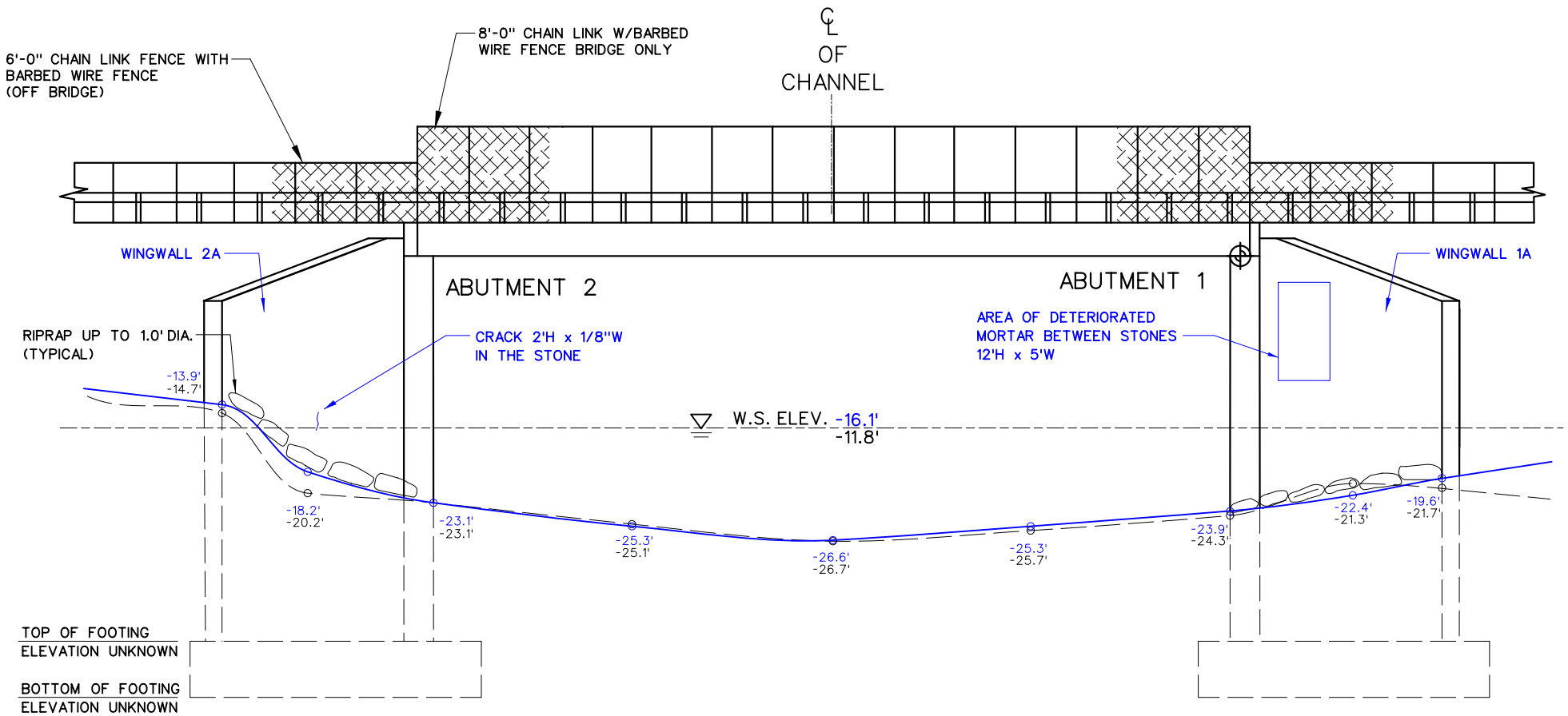

NOTES:

1. THERE WAS MINIMAL WATER FLOW IN THE RESERVOIR AT THE TIME OF THE INSPECTION.
2. THERE IS A SILT CURTAIN PLACED ACROSS THE CHANNEL AT THE NORTH END OF THE BRIDGE.
3. UP TO 1/8"W CRACKS IN THE GROUT BETWEEN STONES ON THE WINGWALLS.
4. CONCRETE CAP ALONG THE TOP OF WINGWALLS EXHIBITS FULL WIDTH HAIRLINE CRACKS AND DETERIORATION UP TO 1' DIAMETER (CAP IS LOCATED OUTSIDE THE LIMIT OF INSPECTION).

NORTH ELEVATION

N.T.S.

LEGEND FOR SYMBOLS

DATUM ELEV. 0.0' TAKEN FROM THE BOTTOM OF THE I-BEAM AT THE NORTH END OF ABUTMENT 1.

W.S. ELEV. -16.1' (2020)
-11.8' (2016)

LEGEND FOR BOTTOM ELEVATIONS

ELEVATION = -0.0'
OCT. 2020 = -0.0'
OCT. 2016 = -0.0'
× INDICATES NO INFORMATION

LEGEND FOR MUDLINE ELEVATIONS

OCT. 2020
OCT. 2016

CONNECTICUT DEPARTMENT OF TRANSPORTATION

BRIDGE NO. 04069
LAKESIDE DRIVE OVER NORTH STAMFORD RESERVOIR
STAMFORD CONNECTICUT

NORTH ELEVATION

INSPECTED BY: CGS REVISED BY: RMV	SCALE: AS SHOWN	DATE OF INSPECTION 10/15/2020	DRAWING NO. 04069B

UW DRAWING 2

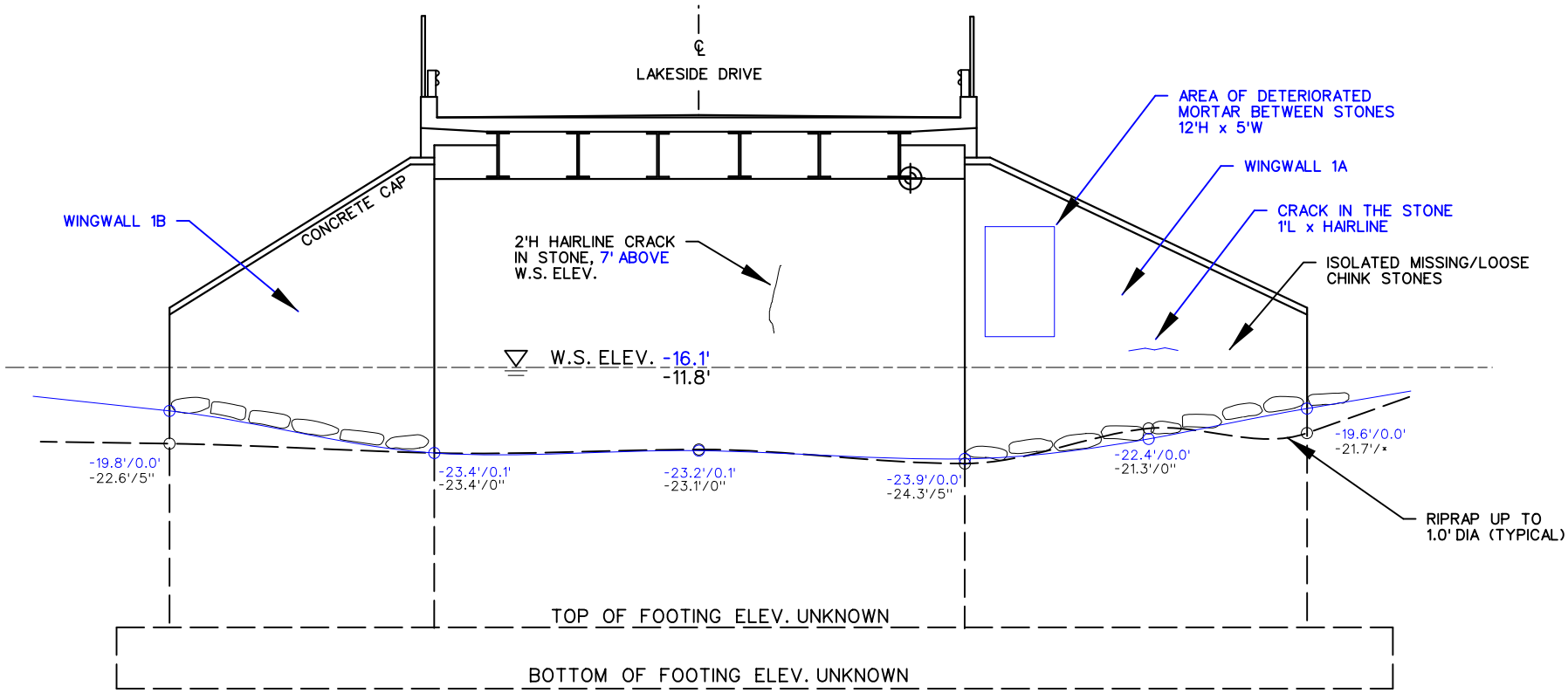

NOTES:

1. THERE ARE LOCALIZED AREAS OF LIGHT TO HEAVY EFFLORESCENCE AND RUST STAINING ALONG THE STEM AND WINGWALLS, CONCENTRATED ON THE TOP 3', DUE TO THE DETERIORATED CONCRETE CAP.
2. POINTING BELOW HIGH WATERMARK IS IN GOOD CONDITION WITH LESS THAN 5% LOOSE OR MISSING MORTAR.
3. THERE WAS MINIMAL WATER FLOW IN THE RESERVOIR AT THE TIME OF THE INSPECTION.
4. MODERATE MAN-MADE DEBRIS ALONG THE MUDLINE.
5. ISOLATED CRACKS UP TO 1/8"W IN THE MORTAR BETWEEN STONES.

ABUTMENT 1

N.T.S.

LEGEND FOR SYMBOLS

⊕ DATUM ELEV. 0.0' TAKEN FROM THE BOTTOM OF THE I-BEAM AT THE NORTH END OF ABUTMENT 1.

▽ W.S. ELEV. -16.1' (2020)
-11.8' (2016)

LEGEND FOR BOTTOM ELEVATIONS

ELEVATION/PENETRATION = -0.0'/0.0'
OCT. 2020 = -0.0'/0.0'
OCT. 2016 = -0.0'/0"
* INDICATES NO INFORMATION

LEGEND FOR MUDLINE ELEVATIONS

——— OCT. 2020
— — — OCT. 2016

CONNECTICUT DEPARTMENT OF TRANSPORTATION				UW DRAWING 3
BRIDGE NO. 04069 LAKESIDE DRIVE OVER NORTH STAMFORD RESERVOIR STAMFORD CONNECTICUT				
ABUTMENT 1				
INSPECTED BY: CGS REVISED BY: RMV	SCALE: AS SHOWN	DATE OF INSPECTION 10/15/2020	DRAWING NO. 04069C	

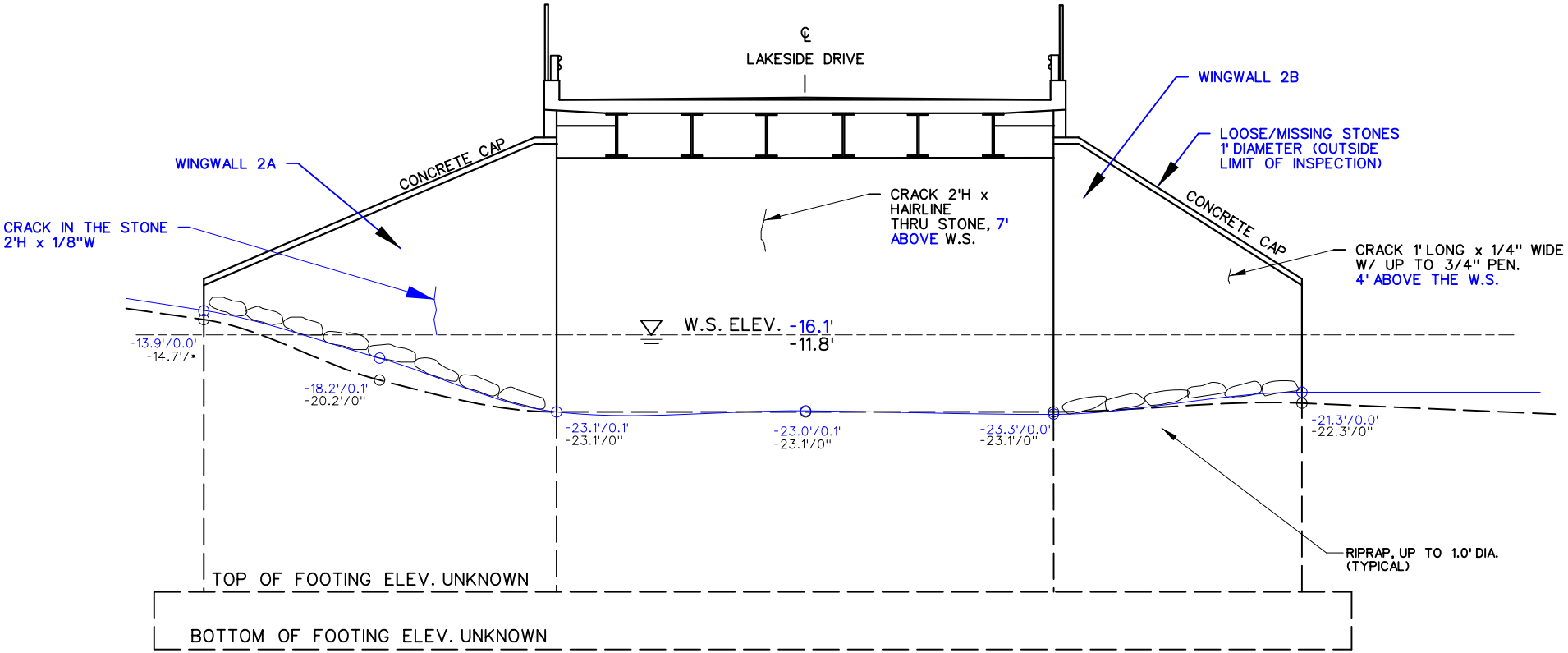

ABUTMENT 2

N.T.S.

NOTES:

1. THERE ARE LOCALIZED AREAS OF LIGHT TO HEAVY EFFLORESCENCE AND RUST STAINING ALONG THE STEM AND WINGWALLS, CONCENTRATED ON THE TOP 3', DUE TO THE DETERIORATED CONCRETE CAP.
2. POINTING BELOW HIGH WATERMARK IS IN GOOD CONDITION WITH LESS THAN 5% LOOSE OR MISSING MORTAR.
3. THERE WAS MINIMAL WATER FLOW IN THE RESERVOIR AT THE TIME OF THE INSPECTION.
4. MODERATE MAN-MADE DEBRIS ALONG THE MUDLINE.
5. ISOLATED CRACKS UP TO 1/8"W IN THE MORTAR BETWEEN STONES.

LEGEND FOR SYMBOLS

⊕ DATUM ELEV. 0.0' TAKEN FROM THE BOTTOM OF THE I-BEAM AT THE NORTH END OF ABUTMENT 1.

▽ W.S. ELEV. -16.1' (2020)
-11.8' (2016)

LEGEND FOR BOTTOM ELEVATIONS

ELEVATION/PENETRATION = -0.0'/0.0'
OCT. 2020 = -0.0'/0.0'
OCT. 2016 = -0.0'/0"
× INDICATES NO INFORMATION

LEGEND FOR MUDLINE ELEVATIONS

——— OCT. 2020
— — — — — OCT. 2016

CONNECTICUT DEPARTMENT OF TRANSPORTATION				UW DRAWING 4
BRIDGE NO. 04069 LAKESIDE DRIVE OVER NORTH STAMFORD RESERVOIR STAMFORD CONNECTICUT				
ABUTMENT 2				
INSPECTED BY: CGS REVISED BY: RMV	SCALE: AS SHOWN	DATE OF INSPECTION 10/15/2020	DRAWING NO. 04069D	

Form: Asset Photos
Inspection type: Underwater
Inspection Date: 10/15/2020
Inspected by: McLaren Engineering Group

:Bridge No 04069

Town: STAMFORD
Carried: LAKESIDE DRIVE
Crossed: NORTH STAMFORD RESERVOIR
Inventory Route: Non-NHS

Photo Number: 1 Photo Taken: 10/15/2020

Bridge identification number.

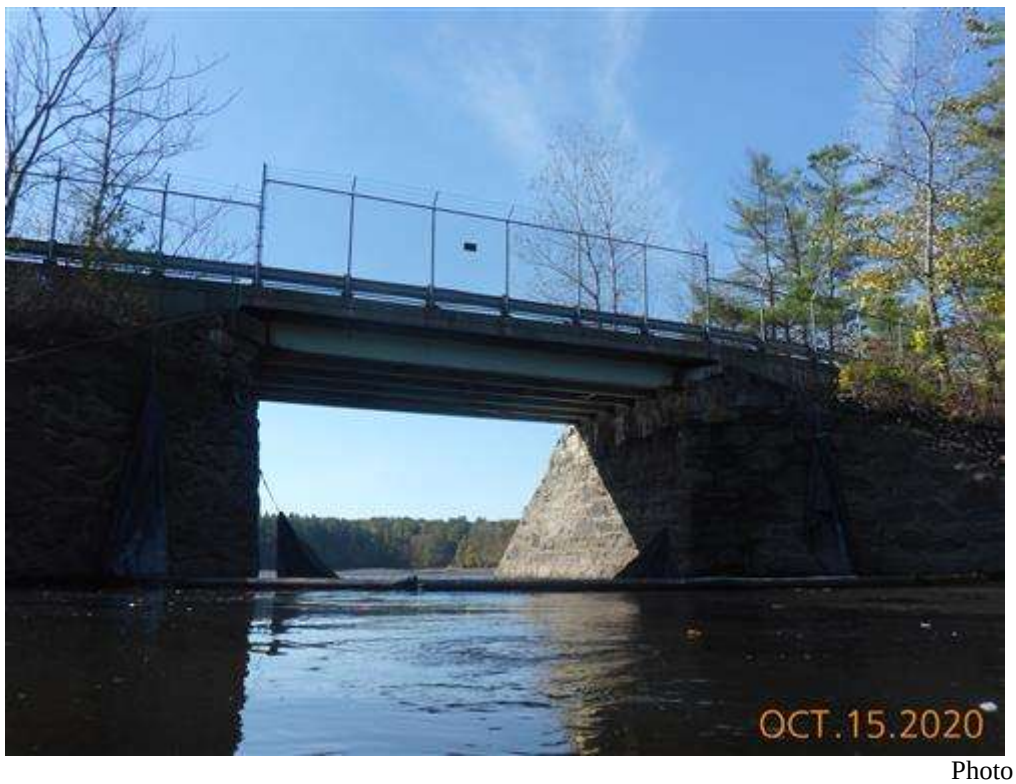

Photo Number: 2 Photo Taken: 10/15/2020

North bridge elevation. The body of water is a reservoir with no noted flow at the time of inspection.

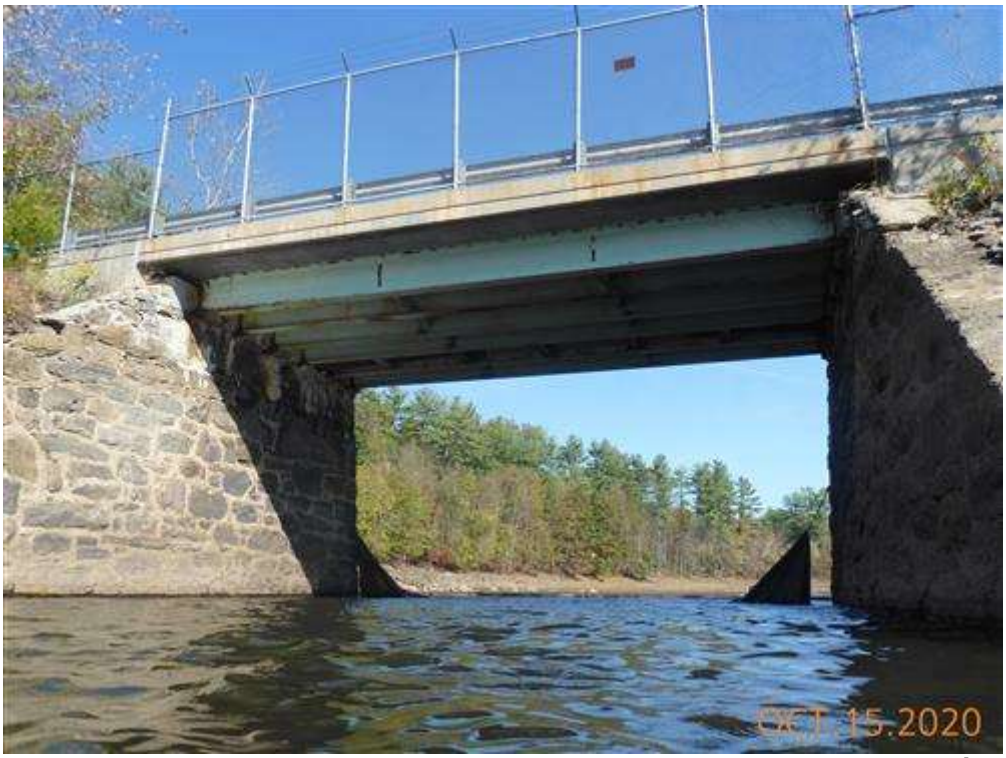

Photo Number: 3 Photo Taken: 10/15/2020

South bridge elevation. The body of water is a reservoir with no noted flow at the time of inspection.

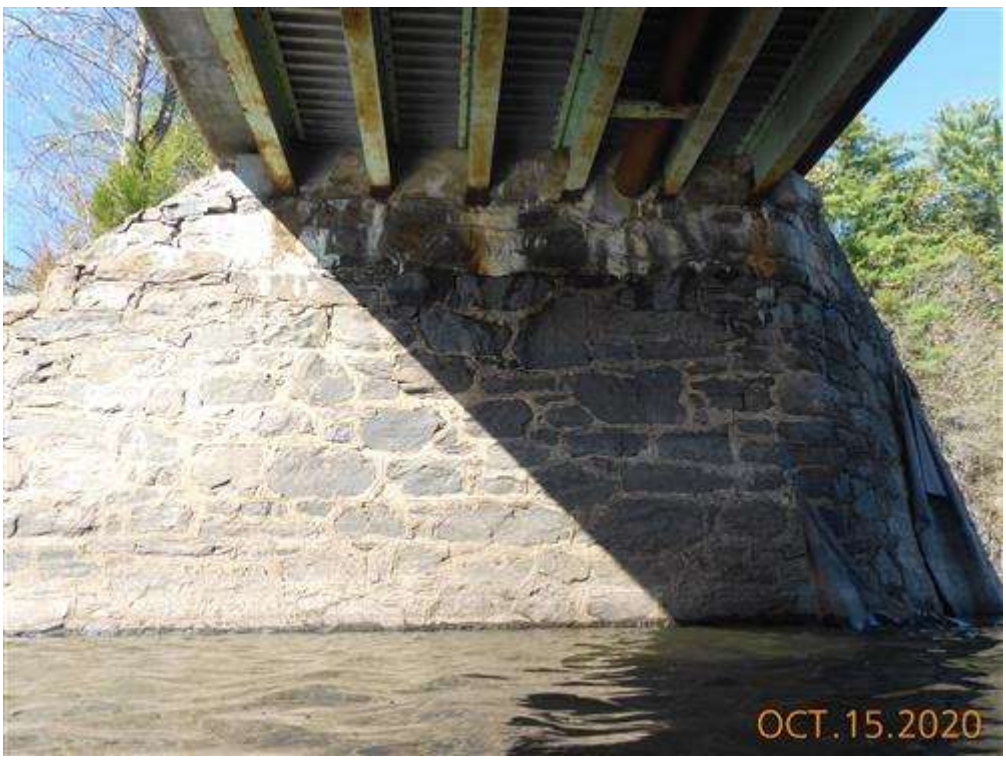

Photo Number: 4 Photo Taken: 10/15/2020

Abutment 1 elevation.

Photo Number: 5 Photo Taken: 10/15/2020

Abutment 2 elevation.

Photo Number: 6 Photo Taken: 10/15/2020

Wingwall 1A elevation.

Photo Number: 7 Photo Taken: 10/15/2020

Area of soft/deteriorating mortar on Wingwall 1A.

Photo Number: 8 Photo Taken: 10/15/2020

Hairline crack through the stone on Wingwall 1A.

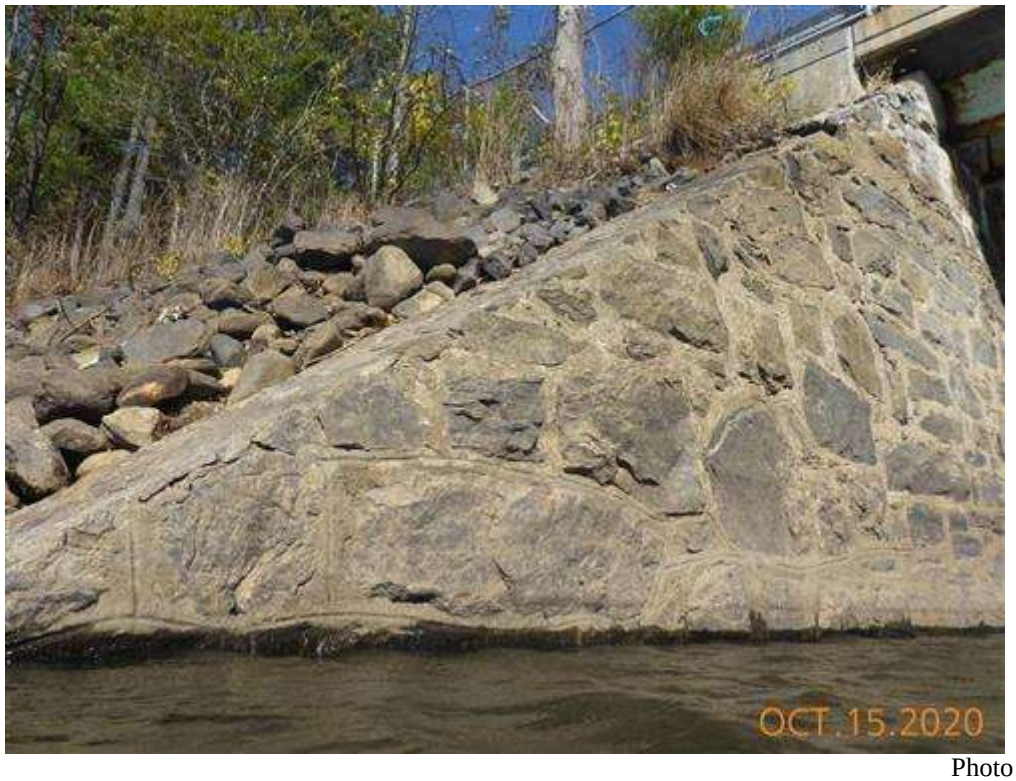

Photo Number: 9 Photo Taken: 10/15/2020

Wingwall 1B elevation.

Photo Number: 10 Photo Taken: 10/15/2020

Wingwall 2A elevation.

Photo Number: 11 Photo Taken: 10/15/2020

Typical crack in the stone up to 1/8" wide on Wingwall 2A.

Photo Number: 12 Photo Taken: 10/15/2020

Wingwall 2B elevation.

Photo Number: 13 Photo Taken: 10/15/2020

Crack 1/4" wide with up to 3/4" penetration on Wingwall 2B.

Photo Number: 14 Photo Taken: 10/15/2020

Northeast embankment.

Photo Number: 15 Photo Taken: 10/15/2020

Northwest embankment.

Photo Number: 16 Photo Taken: 10/15/2020

Southeast embankment.

Photo Number: 17 Photo Taken: 10/15/2020

Southwest embankment.

Photo Number: 18 Photo Taken: 10/15/2020

Channel looking north.

Form: Asset Photos
Inspection type: Underwater
Inspection Date: 10/15/2020
Inspected by: McLaren Engineering Group

:Bridge No 04069

Town: STAMFORD
Carried: LAKESIDE DRIVE
Crossed: NORTH STAMFORD RESERVOIR
Inventory Route: Non-NHS

Photo Number: 19 Photo Taken: 10/15/2020

Channel looking south.